Service Guide

N5230A

Agilent Technologies
4-Port PNA-L
Microwave Network Analyzers
(300 kHz–13.5 GHz)
(300 kHz–20 GHz)

Agilent Technologies

Part Number N5230-90013

Printed in USA
March 2007

Supersedes Print Date: January 2007

© Agilent Technologies, Inc. 2004, 2005, 2007

Warranty Statement

THE MATERIAL CONTAINED IN THIS DOCUMENT IS PROVIDED “AS IS,” AND IS SUBJECT TO BEING CHANGED, WITHOUT NOTICE, IN FUTURE EDITIONS. FURTHER, TO THE MAXIMUM EXTENT PERMITTED BY APPLICABLE LAW, AGILENT DISCLAIMS ALL WARRANTIES, EITHER EXPRESS OR IMPLIED WITH REGARD TO THIS MANUAL AND ANY INFORMATION CONTAINED HEREIN, INCLUDING BUT NOT LIMITED TO THE IMPLIED WARRANTIES OF MERCHANTABILITY AND FITNESS FOR A PARTICULAR PURPOSE. AGILENT SHALL NOT BE LIABLE FOR ERRORS OR FOR INCIDENTAL OR CONSEQUENTIAL DAMAGES IN CONNECTION WITH THE FURNISHING, USE, OR PERFORMANCE OF THIS DOCUMENT OR ANY INFORMATION CONTAINED HEREIN. SHOULD AGILENT AND THE USER HAVE A SEPARATE WRITTEN AGREEMENT WITH WARRANTY TERMS COVERING THE MATERIAL IN THIS DOCUMENT THAT CONFLICT WITH THESE TERMS, THE WARRANTY TERMS IN THE SEPARATE AGREEMENT WILL CONTROL.

DFARS/Restricted Rights Notice

If software is for use in the performance of a U.S. Government prime contract or subcontract, Software is delivered and licensed as “Commercial computer software” as defined in DFAR 252.227-7014 (June 1995), or as a “commercial item” as defined in FAR 2.101(a) or as “Restricted computer software” as defined in FAR 52.227-19 (June 1987) or any equivalent agency regulation or contract clause. Use, duplication or disclosure of Software is subject to Agilent Technologies’ standard commercial license terms, and non-DOD Departments and Agencies of the U.S. Government will receive no greater than Restricted Rights as defined in FAR 52.227-19(c)(1-2) (June 1987). U.S. Government users will receive no greater than Limited Rights as defined in FAR 52.227-14 (June 1987) or DFAR 252.227-7015 (b)(2) (November 1995), as applicable in any technical data.

Certification

Agilent Technologies, Inc. certifies that this product met its published specifications at the time of shipment from the factory. Agilent Technologies, Inc. further certifies that its calibration measurements are traceable to the United States National Institute of Standards and Technology, to the extent allowed by the Institute's calibration facility, and to the calibration facilities of other International Standards Organization members.

Assistance

Product maintenance agreements and other customer assistance agreements are available for Agilent Technologies, Inc. products. For information about these agreements and for other assistance, contact Agilent. Refer to "Contacting Agilent" on page 2-11.

Safety and Regulatory Information

The safety and regulatory information pertaining to this product is located in Chapter 1, "Safety and Regulatory Information."

Safety Notes

The following safety notes are used throughout this manual. Familiarize yourself with each of the notes and its meaning before operating this instrument. All pertinent safety notes for using this product are located in Chapter 1, "Safety and Regulatory Information."

WARNING	**Warning denotes a hazard. It calls attention to a procedure which, if not correctly performed or adhered to, could result in injury or loss of life. Do not proceed beyond a warning note until the indicated conditions are fully understood and met.**

CAUTION	Caution denotes a hazard. It calls attention to a procedure that, if not correctly performed or adhered to, could result in damage to or destruction of the instrument. Do not proceed beyond a caution sign until the indicated conditions are fully understood and met.

Documentation Map

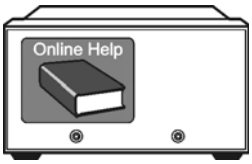

The online Help files are embedded in the analyzer, offering quick reference to programming and user documentation. From the Help drop-down menu, you can access the Help system in five different languages. Also, you can view the Analyzer Product Overview multimedia presentation and access the analyzer's Web page.

The *Installation and Quick Start Guide* helps you to quickly familiarize yourself with the analyzer. Procedures are provided for installing, configuring, and verifying the operation of the analyzer.

Printing Copies of Documentation from the Web

To print copies of documentation from the Web, download the PDF file from the Agilent web site:

- Go to www.agilent.com.
- Enter the product model number in the search function and click **Search**.
- Click on the **Manuals** hyperlink.

Contents

1 Safety and Regulatory Information

Information in This Chapter 1-2
Chapter One at-a-Glance 1-2
Safety Symbols 1-3
General Safety Considerations 1-3
Safety Earth Ground 1-3
Before Applying Power 1-3
Servicing 1-4
Electrostatic Discharge Protection 1-6
Regulatory Information 1-7
Instrument Markings 1-7
Lithium Battery Disposal 1-8

2 General Product Information

Information in This Chapter 2-2
Chapter Two at-a-Glance 2-2
Maintenance 2-3
Physical Maintenance 2-3
Electrical Maintenance 2-3
Analyzer Options Available 2-3
Options as Upgrades 2-3
Understanding your Analyzer's Option Numbers 2-3
Option 010, Time Domain 2-4
Option 014, Configurable Test Set 2-4
Option 080, Frequency Offset Mode 2-4
Option 1CM, Rack Mount Flange Kit for Instruments without Handles 2-4
Option 1CP, Rack Mount Flange Kit for Instruments with Handles 2-4
Option 1E1, Source Attenuator (Extended Power Range) 2-5
Option F13P04, 13.5 GHz Frequency Range 2-5
Option F20P04, 20 GHz Frequency Range 2-5
Option S02, Second Source 2-5
Analyzer Upgrades Available 2-6
Analyzer Accessories Available 2-6
CD-RW Drive 2-6
USB Hub 2-6
Required Service Test Equipment 2-7
Agilent Support, Services, and Assistance 2-10
Service and Support Options 2-10
Calibration Options 2-10
Contacting Agilent 2-11
Shipping Your Analyzer to Agilent for Service or Repair 2-11

3 Tests and Adjustments

Information in This Chapter 3-2
Chapter Three at-a-Glance 3-2
Before You Begin 3-4
Verify the Operating Environment 3-4
Protect Against Electrostatic Discharge (ESD) 3-4

Allow the Analyzer to Warm Up . . . 3-4
Review the Principles of Connector Care . . . 3-5
About System Verification and Performance Tests . . . 3-6
System Specifications . . . 3-6
Instrument Specifications . . . 3-6
System Verification Procedure . . . 3-7
Performance Tests . . . 3-7
Certificate of Calibration . . . 3-7
ANSI/NCSL Z540–1–1994 Verification . . . 3-8
Non-ANSI/NCSL Z540–1–1994 Verification . . . 3-9
Preliminary Checks . . . 3-10
The Operator's Check . . . 3-10
The Test Port Cable Checks . . . 3-12
System Verification . . . 3-19
What the System Verification Verifies . . . 3-19
Measurement Uncertainty . . . 3-20
Measurement Traceability . . . 3-21
Performing System Verification . . . 3-22
Performance Tests (Agilent N7840A Software Package) . . . 3-28
Source Power Accuracy Test . . . 3-28
Source Maximum Power Output Test . . . 3-29
Source Power Linearity Test . . . 3-29
Frequency Accuracy Test . . . 3-30
Trace Noise Test . . . 3-30
Receiver Compression Test . . . 3-31
Noise Floor Test . . . 3-32
Calibration Coefficients Test . . . 3-33
Dynamic Accuracy Test . . . 3-34
Power Meter Accuracy Test . . . 3-35
Adjustments . . . 3-40
10 MHz Frequency Reference Adjustment . . . 3-40
LO Power Adjustment . . . 3-41
Source Calibration Adjustment . . . 3-42
Receiver Calibration Adjustment . . . 3-43

4 Troubleshooting
Information in This Chapter . . . 4-2
Chapter Four at-a-Glance . . . 4-2
Protect Against Electrostatic Discharge (ESD) . . . 4-3
Assembly Replacement Sequence . . . 4-3
Getting Started with Troubleshooting . . . 4-4
Check the Basics . . . 4-4
Troubleshooting Organization . . . 4-5
Power Up Troubleshooting . . . 4-6
Power Supply Check . . . 4-7
Troubleshooting LCD Display Problems . . . 4-12
Front Panel Troubleshooting . . . 4-16
A1 Front Panel Keypad and RPG Test . . . 4-16
A2 Display Test . . . 4-18

A3 Front Panel Interface Board 4-19
Rear Panel Troubleshooting. 4-20
Checking the USB Ports 4-20
Checking the SERIAL (RS-232), PARALLEL (1284-C), or VGA Port 4-21
Checking the GPIB Port 4-21
LAN Troubleshooting 4-22
Measurement System Troubleshooting. 4-26
Before you begin—consider: Where do you see a problem? 4-26
Verifying the A, B, C, D, and R Traces (Standard S-Parameter Mode) 4-28
Where to Begin Troubleshooting 4-30
Checking the Source Group 4-32
Checking the Signal Separation Group 4-45
Checking the Receiver Group 4-49
Instrument Block Diagrams Sheet 1. 4-51
Microwave PNA, N5230A, Options 140 and 240. 4-51
Instrument Block Diagrams Sheet 2. 4-53
Microwave PNA, N5230A, Options 145 and 245. 4-53
Instrument Block Diagrams Sheet 3. 4-55
Microwave PNA, N5230A, Options 146 and 246. 4-55

5 Theory of Operation
Information in This Chapter 5-2
Chapter Five at-a-Glance 5-2
Network Analyzer System Operation 5-3
Functional Groups of the Network Analyzer. 5-3
Synthesized Source Group Operation 5-6
Basic Operation. 5-6
Frequency Offset Operation (Option 080) 5-9
A7, A9, and A13 (Options 146 and 246) Fractional-N Synthesizer Boards 5-9
A6, A8, and A12 (Options 146 and 246) Multiplier Boards 5-9
A19 and A18 (Options 146 and 246) Multiplier/Amplifier/Switch/Splitter 26.5 (MASS 26.5) . 5-9
A10 Frequency Reference Board 5-10
A16 Test Set Motherboard 5-11
A17 Source 2 ALC and Bias Control (QABC) Board (Options 146 and 246) 5-15
Signal Separation Group Operation 5-16
A19 and A18 (Options 146 and 246) Multiplier/Amplifier/Switch/Splitter 26.5 (MASS 26.5) . 5-17
A21, A22, A23, and A24 Test Port Couplers 5-17
A25 (Options 145, 245, 146, and 246) and A26 (Options 146 and 246) 60-dB Source Step Attenuator . . . 5-17
Configurable Test Set (Options 145, 146, 245, and 246). 5-18
Receiver Group Operation 5-22
A20 Mixer Brick 5-22
A5 SPAM Board (Analog Description) 5-22
A29 Reference Channel Switch, Limiter, and DC Block (Options 146 and 246). 5-22
Digital Processing and Digital Control Group Operation 5-25
Front Panel Subgroup. 5-27
Data Acquisition and Processing Subgroup. 5-28
Power Supply Group Operation. 5-30

6 Replaceable Parts
Information in This Chapter . . . 6-2
Chapter Six at-a-Glance . . . 6-2
Ordering Information . . . 6-3
Assembly Replacement Sequence . . . 6-4
Rebuilt-Exchange Assemblies . . . 6-5
Replaceable Parts Listings . . . 6-6
Front Panel Assembly, All Options . . . 6-8
Top Assemblies, All Options Except 146/246 . . . 6-10
Top Cables, All Options Except 146/246 . . . 6-12
Top Assemblies, Options 146/246 . . . 6-14
Top Cables, Options 146/246 (Top View) . . . 6-16
Top Cables, Options 146/246 (Side View) . . . 6-18
Bottom Assemblies, Options 140 and 240 . . . 6-20
Bottom Cables, Options 140 and 240 . . . 6-22
Bottom Assemblies, Options 145 and 245 . . . 6-24
Bottom Cables, Options 145 and 245 . . . 6-26
Bottom Assemblies, Options 146 and 246 . . . 6-28
Bottom Cables, Options 146 and 246 . . . 6-30
Top Hardware and Miscellaneous Parts, All Options . . . 6-32
Bottom Hardware and Miscellaneous Parts, All Options . . . 6-34
Internal Hardware and Miscellaneous Parts, All Options . . . 6-36
External Hardware and Miscellaneous Parts, All Options . . . 6-38
Rear Panel Assembly, All Options . . . 6-40
Hard Disk Drive Assembly, All Options . . . 6-42
Miscellaneous Part Numbers . . . 6-44

7 Repair and Replacement Procedures
Information in This Chapter . . . 7-2
Chapter Seven at-a-Glance . . . 7-2
Personal Safety Warnings . . . 7-3
Electrostatic Discharge (ESD) Protection . . . 7-3
Assembly Replacement Sequence . . . 7-4
Removal and Replacement Procedures . . . 7-5
Removing the Covers . . . 7-6
Removing and Replacing the Front Panel Assembly . . . 7-8
Removing and Replacing Front Panel Subassemblies . . . 7-10
Removing and Replacing the Display Inverter Board and the Display Lamp . . . 7-12
Removing and Replacing the A4 Power Supply Assembly . . . 7-14
Removing and Replacing the A5 through A10 Boards . . . 7-16
Removing and Replacing the A11 Vertical Motherboard and the Plenum Bracket . . . 7-18
Removing and Replacing the A12 Multiplier and the A13 Fractional-N Synthesizer Boards . 7-20
Removing and Replacing the A14 System Motherboard . . . 7-22
Removing and Replacing the A15 CPU Board . . . 7-24
Removing and Replacing the A16 Test Set Motherboard and the USB Hub . . . 7-26
Removing and Replacing the A17 QABC Board . . . 7-28
Removing and Replacing the A18 MASS 26.5 (MASSQuad) . . . 7-30
Removing and Replacing the A19 MASS 26.5 (MASSQuad) and MASSQuad Mounting Block . . 7-32
Removing and Replacing the A20 Mixer Brick (QuintBrick) . . . 7-34

Removing and Replacing the A21, A22, A23, and A24 Test Port Couplers and Coupler Mounting Blocks . . . 7-36
Removing and Replacing the A25 60-dB Source Step Attenuator . . . 7-38
Removing and Replacing the A26 60-dB Source Step Attenuator . . . 7-40
Removing and Replacing the A29 Reference Switch, Limiter, and DC Block . . . 7-42
Removing and Replacing the A40 Floppy Disk Drive . . . 7-44
Removing and Replacing the A41 Hard Disk Drive . . . 7-46
Removing and Replacing the Midweb and the B1 Fan . . . 7-53
Post-Repair Procedures . . . 7-56

A Error Terms
Information in This Appendix . . . A-2
Appendix A at-a-Glance . . . A-2
Using Error Terms as a Diagnostic Tool . . . A-3
Preventive Maintenance . . . A-3
Troubleshooting . . . A-3
Performing Measurement Calibration . . . A-4
Using Flowgraphs to Identify Error Terms . . . A-4
Accessing Error Terms . . . A-8
Manual Access to Error Terms . . . A-8
Programmatic Access to Error Terms . . . A-9
Error Term Data . . . A-10
If Error Terms Seem Worse than Expected . . . A-10
Directivity (EDF and EDR) . . . A-11
Source Match (ESF and ESR) . . . A-12
Load Match (ELF and ELR) . . . A-13
Isolation (Crosstalk) (EXF and EXR) . . . A-14

B Option Enable Utility
Information in This Appendix . . . B-2
Appendix B at-a-Glance . . . B-2
Accessing the Option Enable Utility . . . B-3
Enabling or Removing Options . . . B-4
Repairing and Recovering Option Data . . . B-5
Recovery of Data After Repair . . . B-5
Recovery of Data if Option or Model Numbers are Incorrect . . . B-5
Installing or Changing a Serial Number . . . B-6

C Firmware Upgrades
Information in This Appendix . . . C-2
Appendix C at-a-Glance . . . C-2
How to Check the Current Firmware Version . . . C-2
Downloading from the Internet . . . C-2

D Operating System Recovery
Recovering from Hard Disk Drive Problems . . . D-2

1 Safety and Regulatory Information

Information in This Chapter

This chapter provides safety information that will help protect you and your network analyzer. It also contains information that is required by various government regulatory agencies.

Chapter One at-a-Glance

Section Title	Summary of Content	Start Page
Safety Symbols	Descriptions of **CAUTION** and **WARNING** symbols used throughout this manual.	Page 1-3
General Safety Considerations	A list of safety points to consider when servicing your network analyzer.	Page 1-3
Electrostatic Discharge Protection	A discussion of electrostatic discharge (ESD) and related recommendations and requirements for ESD protection.	Page 1-6
Regulatory Information	Definitions of instrument markings. Instructions for disposing of the analyzer's lithium battery.	Page 1-7

Safety Symbols

The following safety symbols are used throughout this manual. Familiarize yourself with each of the symbols and its meaning before operating this instrument.

CAUTION	Caution denotes a hazard. It calls attention to a procedure that, if not correctly performed or adhered to, could result in damage to or destruction of the instrument. Do not proceed beyond a caution note until the indicated conditions are fully understood and met.
WARNING	**Warning denotes a hazard. It calls attention to a procedure which, if not correctly performed or adhered to, could result in injury or loss of life. Do not proceed beyond a warning note until the indicated conditions are fully understood and met.**

General Safety Considerations

Safety Earth Ground

WARNING	**This is a Safety Class I product (provided with a protective earthing ground incorporated in the power cord). The mains plug shall only be inserted in a socket outlet provided with a protective earth contact. Any interruption of the protective conductor, inside or outside of the instrument, will make the instrument dangerous. Intentional interruption is prohibited.**
CAUTION	Always use the three-prong AC power cord supplied with this product. Failure to ensure adequate grounding by not using this cord may cause product damage.

Before Applying Power

WARNING	**If this product is not used as specified, the protection provided by the equipment could be impaired. This product must be used in a normal condition (in which all means for protection are intact) only.**
WARNING	**If an instrument handle is damaged, you should replace it immediately. Damaged handles can break while you are moving or lifting the instrument and cause personal injury or damage to the instrument.**

CAUTION This instrument has autoranging line voltage input. Be sure the supply voltage is within the specified range.

CAUTION This product is designed for use in Installation Category II and Pollution Degree 2 per IEC 61010-1:2001 and 664 respectively.

CAUTION **Ventilation Requirements:** When installing the product in a cabinet, the convection into and out of the product must not be restricted. The ambient temperature (outside the cabinet) must be less than the maximum operating temperature of the instrument by 4 °C for every 100 watts dissipated in the cabinet. If the total power dissipated in the cabinet is greater than 800 watts, then forced convection must be used.

CAUTION The measuring terminals on this instrument are designed to be used with external signals described in Measurement Category I, but NOT with external signals described in Categories II, III, and IV. The input of this instrument cannot be connected to the mains.

Servicing

WARNING **These servicing instructions are for use by qualified personnel only. To avoid electrical shock, do not perform any servicing unless you are qualified to do so.**

WARNING **Danger of explosion if battery is incorrectly replaced. Replace only with the same or equivalent type recommended. Discard used batteries according to local ordinances and/or manufacturer's instructions.**

WARNING **Procedures described in this document may be performed with power supplied to the product while protective covers are removed. Energy available at many points may, if contacted, result in personal injury.**

WARNING **No operator serviceable parts inside. Refer servicing to qualified personnel. To prevent electrical shock, do not remove covers.**

WARNING **The opening of covers or removal of parts may expose dangerous voltages. Disconnect the instrument from all voltage sources while it is being opened.**

WARNING	**For continued protection against fire hazard, replace line fuse only with same type and rating. The use of other fuses or material is prohibited.**

WARNING	**The detachable power cord is the instrument disconnecting device. It disconnects the mains circuits from the mains supply before other parts of the instrument. The front panel switch is only a standby switch and is not a LINE switch (disconnecting device).**

Electrostatic Discharge Protection

Protection against electrostatic discharge (ESD) is essential while removing assemblies from or connecting cables to the network analyzer. Static electricity can build up on your body and can easily damage sensitive internal circuit elements when discharged. Static discharges too small to be felt can cause permanent damage. To prevent damage to the instrument:

- *always* have a grounded, conductive table mat in front of your test equipment.
- *always* wear a grounded wrist strap, connected to a grounded conductive table mat, having a 1 MΩ resistor in series with it, when handling components and assemblies or when making connections.
- *always* wear a heel strap when working in an area with a conductive floor. If you are uncertain about the conductivity of your floor, wear a heel strap.
- *always* ground yourself before you clean, inspect, or make a connection to a static-sensitive device or test port. You can, for example, grasp the grounded outer shell of the test port or cable connector briefly.
- *always* ground the center conductor of a test cable before making a connection to the analyzer test port or other static-sensitive device. This can be done as follows:
  1. Connect a short (from your calibration kit) to one end of the cable to short the center conductor to the outer conductor.
  2. While wearing a grounded wrist strap, grasp the outer shell of the cable connector.
  3. Connect the other end of the cable to the test port and remove the short from the cable.

Figure 1-1 shows a typical ESD protection setup using a grounded mat and wrist strap. Refer to "ESD Supplies" on page 6-45 for part numbers.

Figure 1-1 ESD Protection Setup

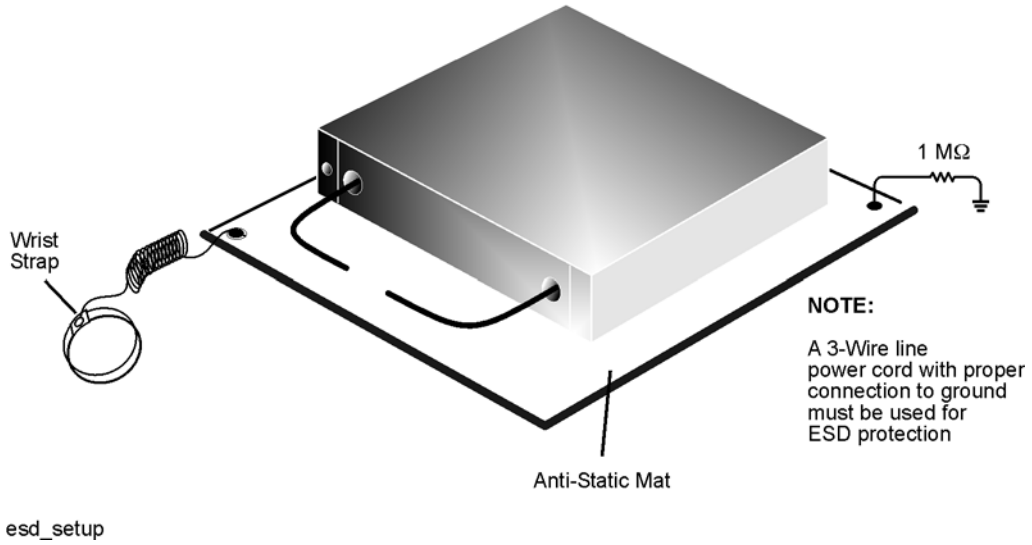

Regulatory Information

This section contains information that is required by various government regulatory agencies.

Instrument Markings

The instruction documentation symbol. The product is marked with this symbol when it is necessary for the user to refer to the instructions in the documentation.

The CE mark is a registered trademark of the European Community. (If accompanied by a year, it is when the design was proven.)

The CSA mark is a registered trademark of the Canadian Standards Association.

ICES/NMB-001

This is a marking to indicate product compliance with the Canadian Interference-Causing Equipment Standard (ICES-001).

ISM1-A

This is a symbol of an Industrial Scientific and Medical Group 1 Class A product.

N10149

This is a required mark signifying compliance with an EMC requirement. The C-Tick mark is a registered trademark of the Australian Spectrum Management Agency.

This product complies with the WEEE Directive (2002/96/EC) marking requirements. The affixed label indicates that you must not discard this electrical/ electronic product in domestic household waste.

Product Category: With reference to the equipment types in the WEEE Directive Annex I, this product is classed as a "Monitoring and Control instrumentation" product.

Do not dispose in domestic household waste.

To return unwanted products, contact your local Agilent office, or see http://www.agilent.com/environment/product/ for more information.

Lithium Battery Disposal

If the battery on the A15 CPU board assembly needs to be disposed of, dispose of it in accordance with your country's requirements. If required, you may return the battery to Agilent Technologies for disposal. Refer to "Contacting Agilent" on page 2-11 for assistance.

DO NOT THROW BATTERIES AWAY BUT
COLLECT AS SMALL CHEMICAL WASTE.

2 General Product Information

Information in This Chapter

Chapter Two at-a-Glance

Section Title	Summary of Content	Start Page
Maintenance	Cleaning instructions for the external surfaces of your analyzer. Information about electrical maintenance of your analyzer.	Page 2-3
Analyzer Options Available	A list of the options available for the microwave network analyzers.	Page 2-3
Analyzer Upgrades Available	A list of the upgrades available for the microwave network analyzers.	Page 2-6
Analyzer Accessories Available	A list of accessories available for the microwave network analyzers.	Page 2-6
Required Service Test Equipment	A list of service equipment that is required to perform system verification, performance tests, adjustments, and troubleshooting.	Page 2-7
Agilent Support, Services, and Assistance	The Internet address (URL) for on-line assistance. Service and support options available. Calibration options available. Important information about shipping your analyzer to Agilent for service or repair.	Page 2-10

Maintenance

WARNING **To prevent electrical shock, disconnect the analyzer from the mains source before cleaning. Use a dry cloth or one slightly dampened with water to clean the external case parts. Do not attempt to clean internally.**

Physical Maintenance

Clean the cabinet, including the front panel, using a dry or slightly damp cloth only.

Electrical Maintenance

Refer to "Contacting Agilent" on page 2-11 and to Chapter 3, "Tests and Adjustments."

Analyzer Options Available

Options as Upgrades

The options described in this section can be ordered as upgrades. Refer to "Analyzer Upgrades Available" on page 2-6.

Refer also to "Upgrade Kits" on page 6-45 for a complete list of available upgrade kits.

Understanding your Analyzer's Option Numbers

The option number contains a basic description of your analyzer as shown below. Other options, such as 010 or 080, may be added to extend this description. All options are described in the following paragraphs.

Figure 2-1 Understanding your Analyzer's Option Numbers

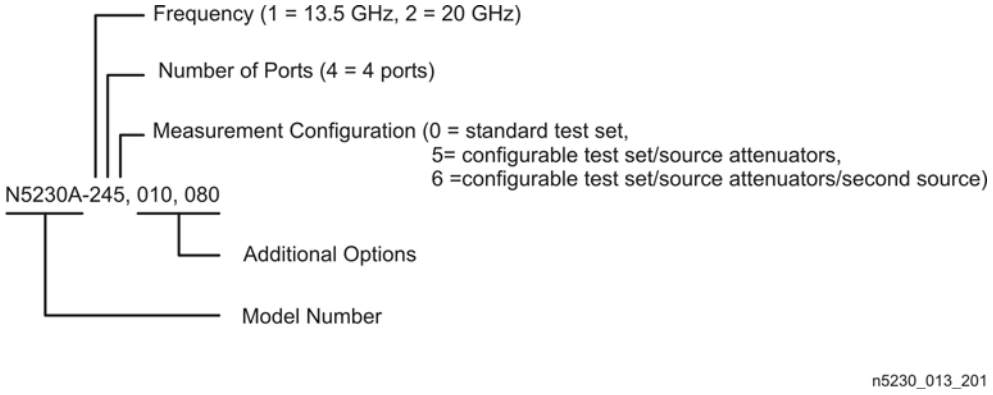

Option 010, Time Domain

This option can be added to any other option combination.

An Option 010 analyzer can display the time domain response of a network or test device by calculating the inverse Fourier transform of the frequency domain response. This calculation allows the Option 010 analyzer to show the response of a test device as a function of time or distance. In time domain, the magnitude and location of a discontinuity and the characteristics of individual transmission paths of a network or test device can be determined. Time domain operation retains all the accuracy of active error correction.

Option 014, Configurable Test Set

This option is included in Options 145, 146, 245, and 246.

An Option 014 analyzer can be configured to measure high-power devices and devices for high dynamic range.

For a high-power measurement, external amplifiers and high power attenuators or isolators can be added to complete the test setup. Test port output power up to 1 Watt (+30 dBm) can be applied to the device under test (DUT).

Additionally, there is an external reference input that allows the external amplifier's frequency response and drift to be ratioed out.

For high dynamic range measurements, front panel jumpers are moved to reverse the signal path through one of the couplers, allowing for a 15 dB improvement in transmitted signal sensitivity in one direction only. Jumpers are installed on both ports allowing the user to choose a measurement in either the forward or reverse direction.

Option 080, Frequency Offset Mode

This option can be added to any other option combination.

This upgrade enables the additional firmware necessary to make frequency offset measurements.

Option 1CM, Rack Mount Flange Kit for Instruments without Handles

Option 1CM provides a rack mount kit that contains a pair of flanges, rack mount rails, and the necessary hardware to mount the analyzer in an equipment rack with 482.6 mm (19 inches) horizontal spacing.

Additional kits may be ordered from Agilent. Refer to "Rack Mount Kits and Handle Kits" on page 6-45 for the part numbers.

Option 1CP, Rack Mount Flange Kit for Instruments with Handles

Option 1CP provides a rack mount kit that contains a pair of flanges (cut to adapt to handles), rack mount rails, and the necessary hardware to mount the analyzer in an equipment rack with 482.6 mm (19 inches) horizontal spacing.

Additional kits may be ordered from Agilent. Refer to "Rack Mount Kits and Handle Kits" on page 6-45 for the part numbers.

Option 1E1, Source Attenuator (Extended Power Range)

This option is included in Options 145, 146, 245, and 246.

This option adds a single 60-dB step attenuator in the signal path of the measurement ports. This step attenuator is used to adjust the power level (in 10 db steps) to the device under test (DUT) without changing the power in the reference path.

Option F13P04, 13.5 GHz Frequency Range

This is a 4-port network analyzer with an upper frequency limit of 13.5 GHz. This option is included in Options 140, 145, and 146.

Option F20P04, 20 GHz Frequency Range

This is a 4-port network analyzer with an upper frequency limit of 20 GHz. This option is included in Options 240, 245, and 246.

Option S02, Second Source

This options adds a second source output with an internal second 60-dB step attenuator in this second source signal path. This option is included in Options 146 and 246.

Analyzer Upgrades Available

The options described in this chapter can be ordered as upgrades. The following table lists the upgrades that are available for the N5230A analyzer described in this service guide. Refer to the previous section, "Analyzer Options Available" on page 2-3, for a complete description of each option included in the upgrades.

Refer also to Chapter 6, "Replaceable Parts" for a complete list of available upgrade kits and for information on how to order.

Table 2-1 Analyzer Upgrades Available

Upgrade	Order Number
Time Domain (Option 010)	N5230AU-010
Frequency Offset Mode (Option 080)	N5230AU-080
13.5 GHz or 20 GHz Standard Test Set to Configurable Test Set with Extended Power Range (Option 140 to 145 or 240 to 245)	N5230AU-926
Add Second Source to 13.5 GHz Configurable Test Set with Extended Power Range (Option 145 to 146)	N5230AU-928
Add Second Source to 20 GHz Configurable Test Set with Extended Power Range (Option 245 to 246)	N5230AU-927
Frequency Extension, 13.5 to 20 GHz (Option 140 to 240 or 145 to 245)	N5230AU-966

Analyzer Accessories Available

CD-RW Drive

This accessory is an external read/write CD drive with a USB cable and can be ordered as model number N4688A.

USB Hub

This accessory is a 4-port USB hub for connecting additional USB peripheral devices and can be ordered as model number N4689A.

Required Service Test Equipment

Equipment	Critical Specifications	Recommended Model or Part Number	Alternate Model or Part Number	Use[a]
Test Instruments and Software				
Frequency counter	Freq: 10 MHz to 10.5 GHz Accuracy : ±0.5 ppm	53151A Opt 001	None	P, A, T
Spectrum analyzer	Min Freq: 1 MHz Max Freq: > 4 GHz Resolution BW: 300 Hz	8565E	856xE	A, T
Power meter	Accuracy: ±0.0068 dB	E4418B/19B Opt G12 or H12[b]	E4418A/19A[c]	P, A, T
Power sensor	Freq: 300 kHz to 3.0 GHz Range: –30 to +20 dBm	8482A	None	P, A, T
Power sensor	Freq: 3.0 GHz to 13. 5 or 20 GHz Range: –30 to +20 dBm	E4413A	None	P, A, T
Dynamic accuracy test set	None specified	Z5623A Opt H01	None	P
Digital multi-meter	Voltage and resistance measurement capability Voltage resolution: 10 mV	Any	Any	T
Printer	N/A	Any printer with Microsoft® Windows® 2000 driver		P
Test software[d]	N/A	N7840A	None	P

a. P = Performance tests, A = Adjustments, T = Troubleshooting, V = System verification
b. The accuracy of a standard E4418B or E4419B of ±0.02 dB is adequate for all tests except "Dynamic Accuracy Test." This test requires a power meter with Option G12 or H12 that has been certified to a higher accuracy specification. If an Option G12 or H12 power meter is not available, a test is provided on page 3-35 to verify the accuracy of a standard power meter.
c. If an accurate measurement of the dynamic accuracy specification is not required, the E4418A or E4419A can be used.
d. The recommended model or part number for all equipment listed with a "P" in the Use column is required for proper operation of this test software.

Microsoft® and Windows® are U.S. registered trademarks of Microsoft Corporation.

Required Service Test Equipment (Cont'd)

Equipment[a]	Critical Specifications	Recommended Model or Part Number	Alternate Model or Part Number	Use[b]
Calibration and Verification Kits				
3.5 mm calibration kit	Freq: 10 MHz to 13.5 or 20 GHz	85052B	85052D	P,T
3.5 mm verification kit	Freq: 10 MHz to 13. 5 or 20 GHz	85053B	None	V
Cables				
BNC cable (2 required)	50Ω, length ≥ 60 cm	8120-1839	None	A
3.5 mm RF cable (2 required)	50Ω, length ≥ 60 cm	85131C	85131E	P,A,V
GPIB cable	N/A	10833A/B/C/D	None	P,A
Adapters				
3.5 mm (f) to 3.5 mm (f)	Return Loss: ≥ 32 dB	83059B	85052-60012[c]	P,A,T
3.5 mm (f) to type-N (m)	Return Loss: ≥ 28 dB	1250-1743	None	P,A,T
Attenuators				
3.5 mm (m,f), 10-dB fixed attenuator	Accuracy: ± 0.5 dB Freq: 10 MHz to 13.5 or 20 GHz	8493C Option 010	None	P
3.5 mm (m,f), 20-dB fixed attenuator	Accuracy: ± 0.5 dB Freq: 10 MHz to 13.5 or 20 GHz	8493C Option 020	None	P

a. Unless specified otherwise, equipment listed is required for all analyzer models.
b. P = Performance tests, A = Adjustments, T = Troubleshooting, R = Repair, V = System verification
c. Included in the 85052B/D calibration kits.

Required Service Test Equipment (Cont'd)

Equipment[a]	Critical Specifications	Recommended Model or Part Number	Alternate Model Number	Use[b]
Tools				
Extender board	N/A	E8356-60021	None	T
T-8 TORX driver	0.6 N-m (5 in-lb) setting	N/A	N/A	R
T-10 TORX driver	0.5, 0.8, and 1.0 N-m (4, 7, and 9 in-lb) settings	N/A	N/A	T, R
T-15 TORX driver	1.5 N-m (14 in-lb) setting	N/A	N/A	T, R
T-20 TORX driver	2.4 N-m (21 in-lb) setting	N/A	N/A	T, R
1/4 inch and 5/16 inch open-end wrench	Thin profile	8710-0510	N/A	A, R
5/16 inch, open-end torque wrench (metric equivalent is 8 mm)	1.1 and 2.4 N-m (10 and 21 in-lb) settings (for semi-rigid cables)	N/A	N/A	T, R
1 inch, open-end torque wrench (metric equivalent is 26 mm)	8.1 N-m (72 in-lb) setting (for test port connector nuts)	N/A	N/A	R
20 mm, open-end torque wrench	0.9 N-m (8 in-lb) setting (for test port measurement connections)	8710-1764	N/A	P, A, T
Static Safety Parts				
Adjustable antistatic wrist strap	N/A	9300-1367	None	P, A, T
Antistatic wrist strap grounding cord (5 foot)	N/A	9300-0980	None	P, A, T
Static control table mat and earth ground wire	N/A	9300-0797	None	P, A, T
Floppy disks	3.5 inch	Any	None	A
Miscellaneous				
Floppy disks	3.5 inch	Any	None	A
USB flash ROM drive	N/A	Any	None	P, A

a. Unless specified otherwise, equipment listed is required for all analyzer models.
b. P = Performance tests, A = Adjustments, T = Troubleshooting, R = Repair, V = System verification

Agilent Support, Services, and Assistance

Information on the following topics is included in this section.

- "Service and Support Options"
- "Calibration Options"
- "Contacting Agilent"
- "Shipping Your Analyzer to Agilent for Service or Repair"

Service and Support Options

The analyzer's standard warranty is a *one-year return to Agilent Technologies* service warranty.

NOTE There are many other repair and calibration options available from the Agilent Technologies support organization. These options cover a range of service agreements with varying response times. Contact Agilent for additional information on available service agreements for this product. Refer to "Contacting Agilent" on page 2-11.

Calibration Options

Option R-50C-001, Commercial Calibration with Data

This option adds a calibration label, a calibration certificate, and the corresponding calibration data on a 3.5-in floppy disk. This calibration conforms to ISO 9001.

This certificate and data can be obtained by sending your analyzer to Agilent for calibration along with an order for R-50C-001. Refer to "Shipping Your Analyzer to Agilent for Service or Repair".

Option R-50C-002, Standards Compliant Calibration

This option adds calibration label, a calibration certificate, and the corresponding calibration data, measurement uncertainties, and guardbands on all customer specifications on a CD-ROM. This calibration conforms to ISO 17025 and ISO 9001.

This certificate and data can be obtained by sending your analyzer to Agilent for calibration along with an order for R-50C-002. Refer to "Shipping Your Analyzer to Agilent for Service or Repair".

Contacting Agilent

Assistance with test and measurements needs and information on finding a local Agilent office are available on the Web at:
http://www.agilent.com/find/assist

If you do not have access to the Internet, please contact your Agilent field engineer.

NOTE In any correspondence or telephone conversation, refer to the Agilent product by its model number and full serial number. With this information, the Agilent representative can determine whether your product is still within its warranty period.

Shipping Your Analyzer to Agilent for Service or Repair

IMPORTANT Agilent Technologies reserves the right to reformat or replace the internal hard disk drive in your analyzer as part of its repair. This will erase all user information stored on the hard disk. It is imperative, therefore, that you make a backup copy of your critical test data located on the analyzer's hard disk before shipping it to Agilent for repair.

If you wish to send your network analyzer to Agilent Technologies for service or repair:

- Include a complete description of the service requested or of the failure and a description of any failed test and any error message.
- Ship the analyzer using the original or comparable antistatic packaging materials.
- Contact Agilent for instructions on where to ship your analyzer. Refer to "Contacting Agilent" on page 2-11.

3 Tests and Adjustments

Information in This Chapter

This chapter contains procedures to help you check, verify, and adjust your PNA.

- The checks verify the operation of the assemblies in your analyzer.
- The verification compares the operation of your analyzer to a gold standard.
- The adjustments allow you to tune your analyzer for maximum response.

NOTE A description of the performance tests in the Agilent N7840A software package is included in this chapter. The Agilent N7840A software package must be purchased separately.

Chapter Three at-a-Glance

Section Title	Summary of Content	Start Page
Before You Begin	Items to consider or procedures to perform before testing is begun: • Verify the Operating Environment • Protect Against Electrostatic Discharge (ESD) • Allow the Analyzer to Warm Up • Review the Principles of Connector Care	Page 3-4
About System Verification and Performance Tests	Descriptions of: • System Specifications • Instrument Specifications • System Verification Procedure • Performance Tests • Certificate of Calibration	Page 3-6
ANSI/NCSL Z540–1–1994 Verification	The ANSI/NCSL Z540-1-1994 process of verifying your analyzer.	Page 3-8
Non-ANSI/NCSL Z540–1–1994 Verification	The non-ANSI/NCSL Z540-1-1994 process of verifying your analyzer.	Page 3-9
Preliminary Checks	Performing the operator's check. Checking your test cables. *Perform these checks before performing system verification.*	Page 3-10

Section Title	Summary of Content	Start Page
System Verification	What the system verification does. How to perform the verification test. How to interpret the results.	Page 3-19
Performance Tests (Agilent N7840A Software Package)[a]	A brief summary of each performance test in the Agilent N7840A software package: • Source Power Accuracy Test • Source Maximum Power Output Test • Source Power Linearity Test • Frequency Accuracy Test • Trace Noise Test • Receiver Compression Test • Noise Floor Test • Calibration Coefficients Test • Dynamic Accuracy Test	Page 3-28
Adjustments	Setups and procedures for adjusting your analyzer: • 10 MHz Frequency Reference Adjustment • LO Power Adjustment • Source Calibration Adjustment • Receiver Calibration Adjustment	Page 3-40

a. The Agilent N7840A software package must be purchased separately.

Before You Begin

Before checking, verifying, or adjusting the analyzer, refer to the following paragraphs to:

- make sure the operating environment is within its requirements
- make sure that proper electrostatic discharge (ESD) protection is provided
- make sure the analyzer has warmed up properly to achieve system stability
- review the principles of connector care

Verify the Operating Environment

Due to their operating specifications, the verification and calibration kit devices determine your operating environment conditions. Open the calibration and verification kits and place all the devices on top of the foam inserts so they will reach room temperature. As the device dimensions change with temperature, their electrical characteristics change as well. It is necessary to keep the environmental levels within the following limits:

- Temperature: +23 °C ± 3 °C (Error-corrected temperature range)

  Once the measurement calibration has been done, the ambient temperature must be maintained to within ± 1 °C of the calibration temperature.
- Humidity: 5% to 95% at 40 °C maximum
- Altitude: 0 to 4,500 meters (14,760 feet.)

Protect Against Electrostatic Discharge (ESD)

This is important. If not properly protected against, electrostatic discharge can seriously damage your analyzer, resulting in costly repair.

CAUTION To reduce the chance of electrostatic discharge, follow all of the recommendations outlined in "Electrostatic Discharge Protection" on page 1-6, for all of the procedures in this chapter.

Allow the Analyzer to Warm Up

NOTE To achieve the maximum system stability, allow the analyzer to warm up for at least 90 minutes.

Review the Principles of Connector Care

Proper connector care and connection techniques are critical for accurate and repeatable measurements. Refer to Table 3-1 for tips on connector care.

Prior to making connections to your analyzer, carefully review the information about inspecting, cleaning, and gaging connectors. Refer to the calibration kit documentation for detailed connector care information.

For course numbers about additional connector care instruction, contact Agilent Technologies. Refer to "Contacting Agilent" on page 2-11.

Table 3-1 Connector Care Quick Reference Guide

Handling and Storage			
Do	• Keep connectors clean • Extend sleeve or connector nut • Use plastic end-caps during storage	**Do Not**	• Touch mating-plane surfaces • Set connectors contact-end down • Store connectors or adapters loose
Visual Inspection			
Do	• Inspect all connectors carefully • Look for metal particles, scratches, and dents	**Do Not**	• Use a damaged connector - ever
Connector Cleaning			
Do	• Try compressed air first • Use isopropyl alcohol[a] • Clean connector threads	**Do Not**	• Use any abrasives • Get liquid into plastic support beads
Gaging Connectors			
Do	• Clean and zero the gage before use • Use the correct gage type • Use correct end of calibration block • Gage all connectors before first use	**Do Not**	• Use an out-of-specification connector
Making Connections			
Do	• Align connectors carefully • Make preliminary connection contact lightly • Turn only the connector nut • Use a torque wrench for final connection	**Do Not**	• Apply bending force to connection • Over tighten preliminary connection • Twist or screw any connection • Tighten past torque wrench "break" point

a. Cleaning connectors with alcohol shall only be done with the instrument's power cord removed, and in a well-ventilated area. Allow all residual alcohol moisture to evaporate, and the fumes to dissipate prior to energizing the instrument.

About System Verification and Performance Tests

The performance of the network analyzer is specified in two ways: system specifications, and instrument specifications. It is the end user's responsibility to determine which set of specifications is applicable to their use of the PNA.

A network analyzer measurement "system" includes the analyzer, calibration kit, test cables, and any necessary adapters. **The system verification software in the PNA is used to verify the system's conformance to the "system" specifications.** A "pass" result demonstrates that the analyzer, test cables, and adapters, perform correctly as a system. It DOES NOT demonstrate that any one component performs according to its individual specifications. A change to any part of this measurement system requires a re-verification of the system.

Instrument specifications specify the network analyzer's uncorrected measurement port characteristics and its output and input behavior. **The PNA performance tests are used to verify the analyzer's conformance to "instrument" specifications.**

System Specifications

System specifications specify warranted performance of the measurement system when making error-corrected measurements using the same calibration kit and test cables used during the system verification routine. System specifications are applicable only when the measurement system is used to make error-corrected measurements.

The analyzer's system specifications are described in the *Agilent PNA Series Network Analyzer Technical Specifications* and also in the analyzer's on-line help system in the section titled "Corrected System Performance".

System specifications are expressed in two ways:

- residual errors of the measurement system shown as tabular specification values
- graphs of measurement uncertainty versus reflection and transmission coefficients

System specifications are verified in one of the following ways:

- Complete the system verification procedure using a certified verification kit and certified calibration kit that will be used for future measurements, or
- Complete all of the performance tests using a certified calibration kit that will be used for future measurements. This alternative verifies both the system specifications and the instrument specifications for the analyzer.

Instrument Specifications

The analyzer's instrument specifications are described in the *Agilent PNA Series Network Analyzer Technical Specifications* and also in the analyzer's on-line help system in the sections titled "Uncorrected System Performance", "Test Port Output", and "Test Port Input".

These specifications apply when the analyzer is used to make either raw or error-corrected measurements.

System Verification Procedure

The system verification procedure tests the network analyzer measurement "system", as defined previously, against the system specifications. If confirmation is successful, the measurement system is capable of making measurements to the accuracy specified by the graphs of measurement uncertainty.

An illustrated outline of the system verification procedure:

- for ANSI/NCSL Z540-1-1994 verification, is shown in Figure 3-1 on page 3-8.
- for non-ANSI/NCSL Z540-1-1994 verification, is shown in Figure 3-2 on page 3-9.

NOTE Calibration kits are different from verification kits. Calibration kits are used to determine the systematic errors of a network analyzer measurement system. Verification kits are used to confirm system specifications and are not used to generate error correction.

Performance Tests

Performance tests are used to confirm analyzer performance against the "instrument" specifications. If confirmation is successful, the analyzer meets the instrument specifications.

Performance tests are contained in the N7840A Software Package and are described at "Performance Tests (Agilent N7840A Software Package)" on page 3-28.

Certificate of Calibration

Agilent Technologies will issue a certificate of calibration upon successful completion of system verification or completion of the performance tests. The certificate of calibration will apply to the "system" (analyzer, calibration kit, test cables, and any necessary adapters) if the system verification procedure is used to confirm the system specifications. If the performance tests are used to confirm instrument specifications, the certificate of calibration will apply to the PNA as an independent instrument. The equipment and measurement standards used for the tests must be certified and must be traceable to recognized standards.

NOTE If you have a measurement application that does not use all of the measurement capabilities of the analyzer, you may ask your local Agilent Technologies service office to verify only a subset of the specifications. However, this "limited calibration" creates the possibility of making inaccurate measurements if you then use the analyzer in an application requiring additional capabilities.

ANSI/NCSL Z540–1–1994 Verification

To meet the criteria for ANSI/NCSL Z540-1-1994, perform the preliminary checks and either system verification or performance tests *without stopping to repair or adjust*[1]. Refer to Figure 3-1 for test flow. Print data at the completion of all the tests, even if you are aware that the analyzer did not pass. If there is a failure, complete the verification before you troubleshoot, repair, and adjust. After the failure has been corrected, repeat the entire system verification or performance tests and generate a new set of data.

Figure 3-1 ANSI/NCSL Z540–1–1994 Test Path Verification Flowchart

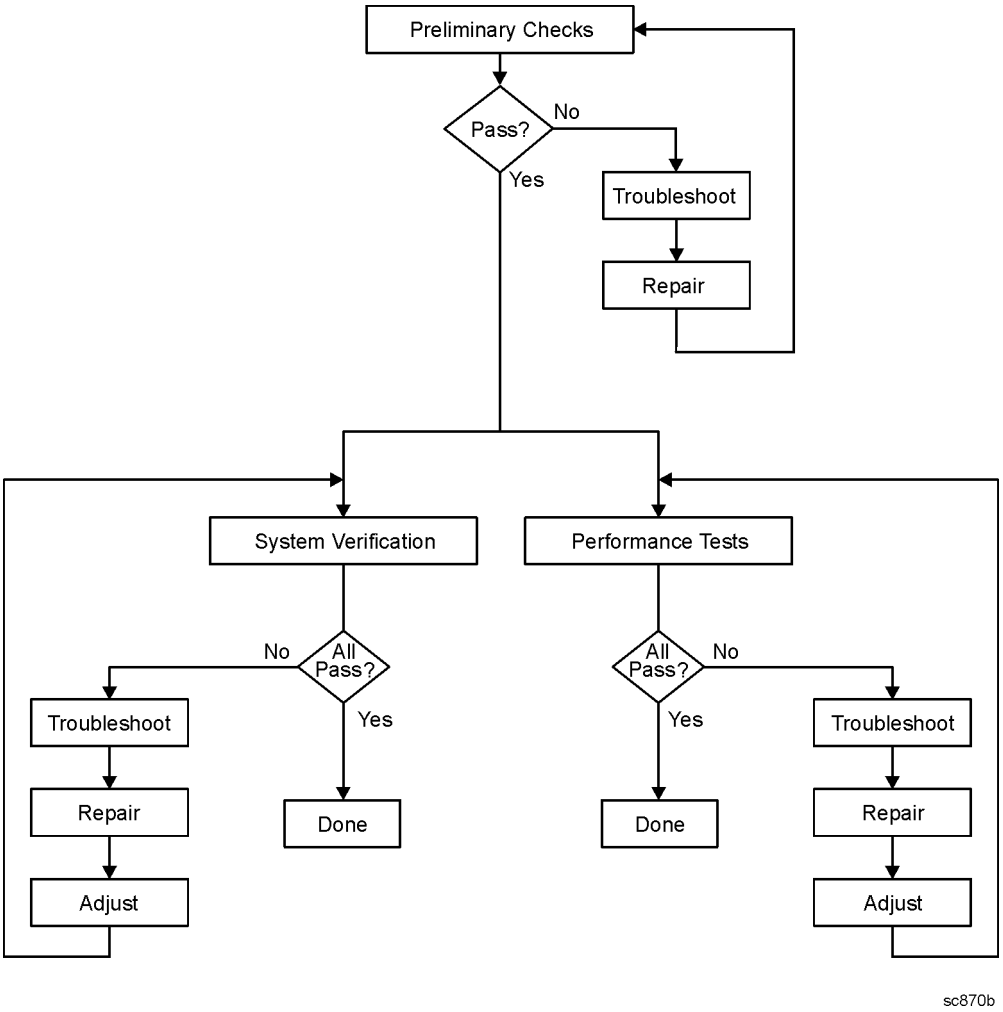

1. Stop only in case of a catastrophic failure or cable connector damage

Non-ANSI/NCSL Z540–1–1994 Verification

For non-ANSI/NCSL Z540-1-1994, perform the preliminary checks and either the system verification or performance tests while *stopping to troubleshoot*. Refer to Figure 3-2 for test flow. Troubleshoot and repair the first problem encountered without continuing to other tests. After you troubleshoot, repair, and adjust, repeat the *last failed* portion and generate a new set of data. Print out the system verification results or complete the performance test record as the analyzer passes each test.

Figure 3-2 Non–ANSI/NCSL Z540–1–1994 Test Path Verification Flowchart

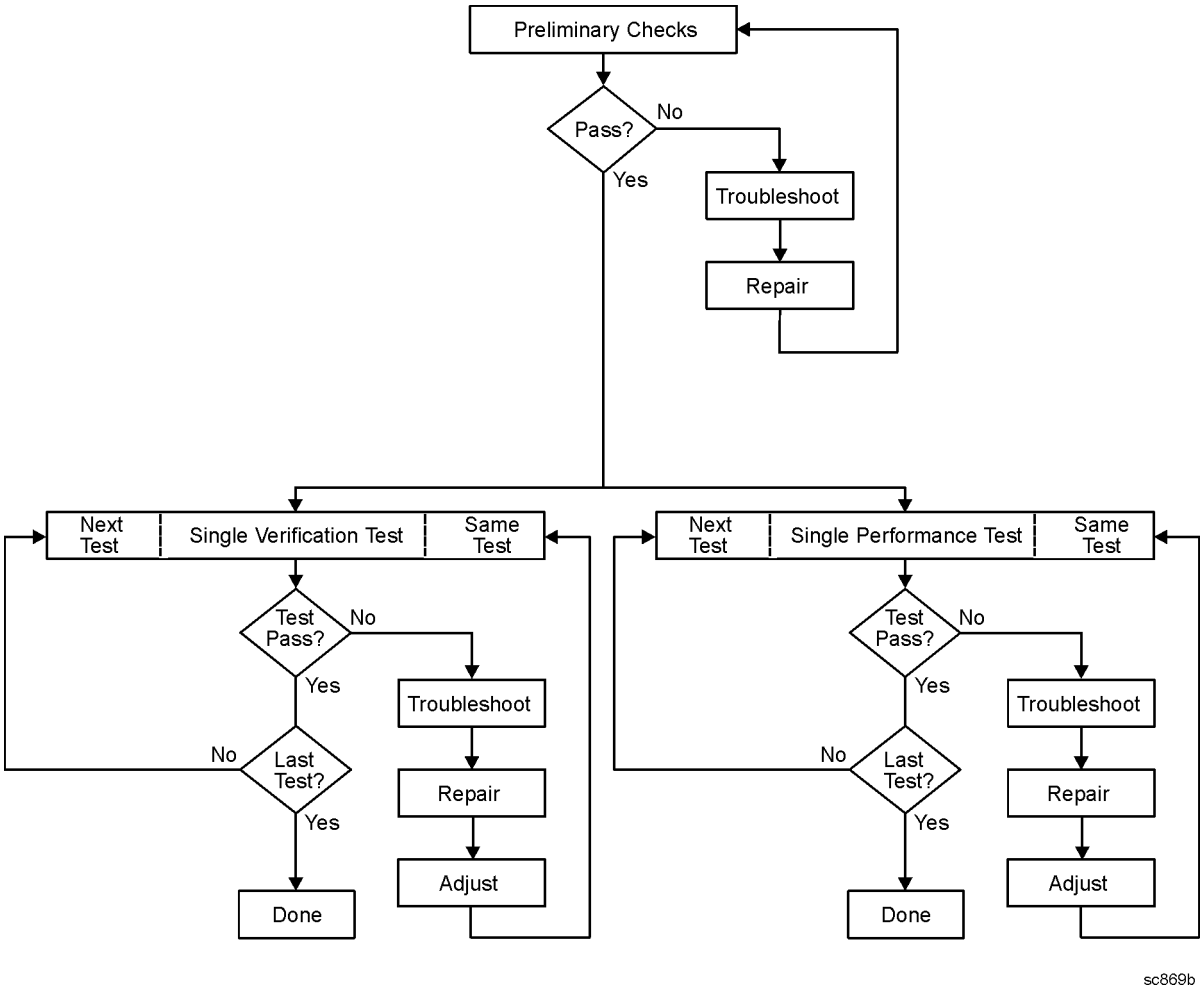

Preliminary Checks

Preliminary checks include the following:

- "The Operator's Check" on page 3-10

  The operator's check tests the network analyzer's basic functionality of the source, switch, and receivers.

- "The Test Port Cable Checks" on page 3-12

  The test port cable checks are not required, but are recommended to verify the performance of the test port cables before performing the verification test.

The Operator's Check

NOTE To achieve the maximum system stability, allow the analyzer to warm up for at least 90 minutes before performing the Operator's Check.

The operator's check is a software driven test that checks the basic operation of the assemblies in the Port 1 and Port 2 signal paths. By performing the operator's check, the following are determined:

- repeatability of the RF test port switch
- attenuation ranges of all installed attenuators
- calibration of the receivers
- frequency response of the receivers
- phase lock and leveling
- noise floor and trace noise

Accessories Used in the Operator's Check

Equipment Type	Part Number
Female short, 3.5 mm	85052-60007 (from the 85052 calibration kit)
Female open, 3.5 mm	85052-60009 (from the 85052 calibration kit)

Performing the Operator's Check

1. From the **System** menu, point to **Service**, and then click **Operator's Check**.
2. In the **PNA Operator's Check** dialog box (refer to Figure 3-3), under **Configure**, select either **Prompt for attachment of Short/Open**, to pause at each step in the process to allow moving the short/open to the appropriate port, or **Shorts/Opens are attached to ALL ports**, to run through the test without stopping. Shorts and opens can be mixed on the test ports.
3. Click **Begin**.
4. If shorts and opens are not connected to all ports, you will be prompted to connect them as they are needed.

5. The result of the operator's check will be shown as a PASS or FAIL next to each test (refer to Figure 3-3). The PNA Operator's Check dialog box will look different for different PNA model numbers and installed options. Some of the tests are performed only if the appropriate options are installed in the PNA.

Figure 3-3 Operator's Check Dialog Box

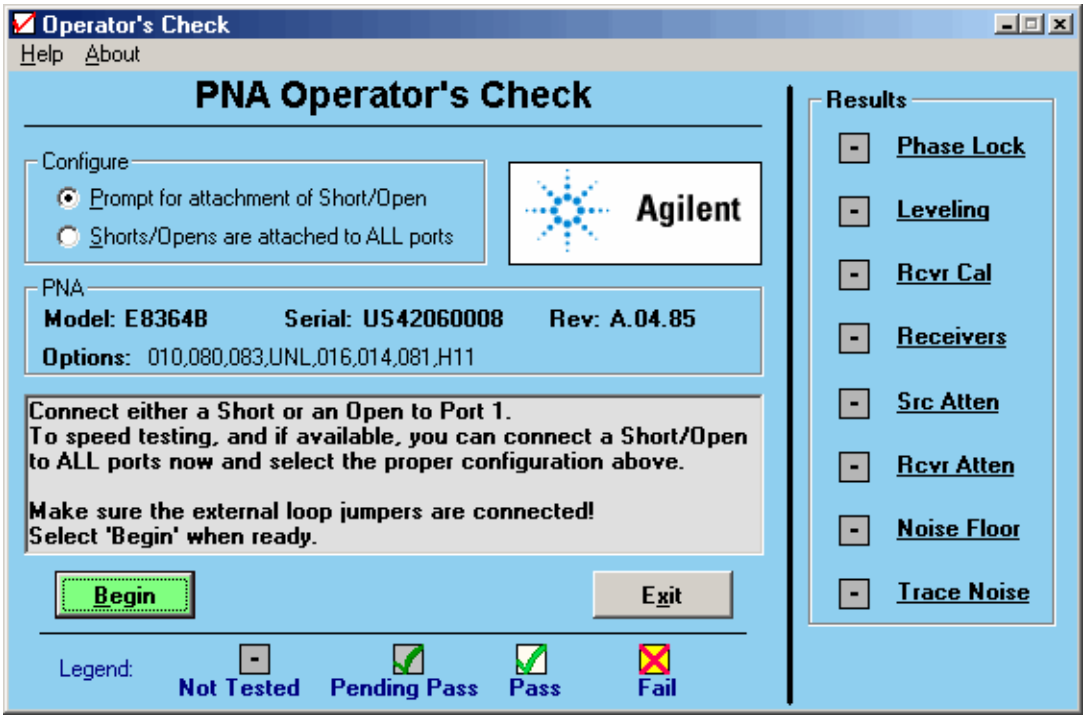

If the Operator's Check Fails

1. Clean the test ports, shorts, and adapters. Torque connections to specification. Repeat the check.
2. If the check still fails, suspect a faulty component. Refer to "Measurement System Troubleshooting" on page 4-26 to begin troubleshooting to determine the faulty component.

The Test Port Cable Checks

A faulty test port cable can cause a failure in the verification test. The following checks are not required, but are recommended to verify the performance of the test port cable.

- "Cable Return Loss Check" on page 3-13
- "Cable Insertion Loss Check" on page 3-14
- "Cable Magnitude and Phase Stability Check" on page 3-15
- "Cable Connector Repeatability Check" on page 3-17

Accessories Used in the Test Port Cable Checks

Equipment Type	Model or Part Number	Alternate Model or Part Number
Calibration kit, 3.5 mm	85052B	85052D
Test cable, 3.5 mm (f) to 3.5 mm (f)	85131C	85131E

Cable Return Loss Check

1. Press **Preset**.
2. Perform a one-port calibration on Port 1, **1-Port Reflection**. Refer to the embedded help in the analyzer if necessary.
3. Connect the test port cable to Port 1. Connect a broadband load to the other end of the cable. Tighten to the specified torque for the connector type.

   The analyzer now displays the return loss of the cable.
4. From the **Marker** menu, click **Marker Search**. In the **Marker Search** dialog box, in the **Search Type** box, make sure **Maximum** is selected. Click **Execute**, and then click **OK**.
5. The marker annotation on the screen indicates the worst case return loss. Refer to the cable manual to see if it meets the return loss specification. For an example of a typical return loss measurement, see Figure 3-4.

Figure 3-4 Typical Cable Return Loss Response

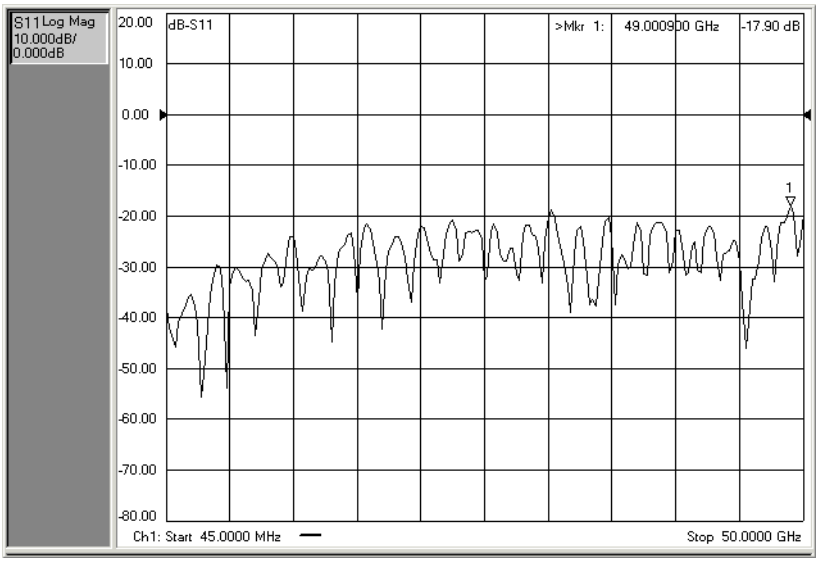

If the Cable Return Loss Check Fails

1. Clean the cable and devices and torque to specification. Repeat the check.
2. If the check still fails, the cable should be repaired or replaced.

Cable Insertion Loss Check

1. With the test port cable still connected to Port 1, connect a short to the other end of the cable.
2. From the **Marker** menu, click **Marker Search**. In the **Marker Search** dialog box, in the **Search Type** box, select **Minimum**. Click **Execute**, and then click **OK**.
3. The displayed response is twice the actual loss. To get the actual worst case insertion loss, divide the value at the marker annotation by two. Refer to the cable manual to see if it meets the insertion loss specification. For an example of a typical insertion loss measurement, see Figure 3-5.

Figure 3-5 Typical Cable Insertion Loss Response

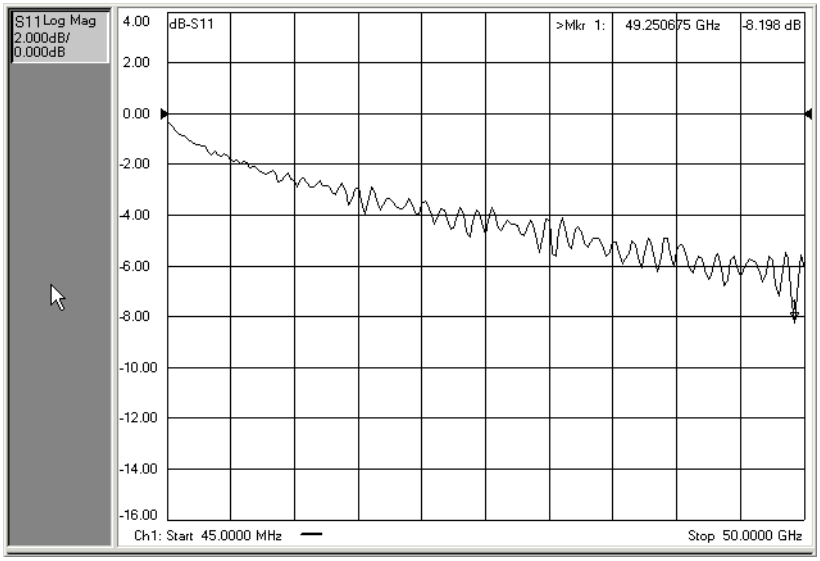

If the Cable Insertion Loss Check Fails

1. Clean the cable and devices and torque to specification. Repeat the check.
2. If the check still fails, the cable should be repaired or replaced.

Cable Magnitude and Phase Stability Check

1. With the test port cable still connected to Port 1, connect a short to the other end of the cable.
2. Press **Preset**.
3. On the **Trace** menu, click **New Trace.** In the **New Trace** dialog box, click the **S11** box, and then click **OK**.
4. On the **Trace** menu, click **Format**. In the **Format** dialog box, click **Phase**, and then click **OK**.
5. On the **Channel** menu, click **Average**. In the **Average** dialog box, click the **Average ON** check box. In the **Average Factor** box, type 50 or click the arrows to select 50, and then click **OK**.
6. To provide a good reference, hold the test cable in a straight line perpendicular to the front panel of the network analyzer.
7. On the **Channel** menu, click **Restart Avg**.
8. Wait for the analyzer to average the measurement 50 times (approximately two seconds).
9. To normalize the data trace:
   a. On the **Trace** menu, click **Math/Memory**.
   b. In the **Math/Memory** dialog box, click the **Data->Memory** button.
   c. In the **Data Math** list, select **Data/Memory**.
   d. Under **Trace View Options**, make sure **Data Trace** is selected.
   e. Click **OK**
10. Slowly make a 180 degree bend in the middle of the cable and hold it in that position.
11. For each trace: On the **Scale** menu, set the **Scale Per Division** for optimum viewing as shown in Figure 3-6.
12. Place a marker on the largest deflection that goes above the reference line and is within the cable's specified frequency range. For a typical response of cable magnitude and phase stability, see Figure 3-6.
13. Place a marker on the largest deflection that goes below the reference line and is within the cable's specified frequency range.

    In this S_{11} measurement, the displayed trace results from energy being propagated down the cable and reflected back from the short. Therefore, the measured deflection value must be divided in half to reach the correct value.

Figure 3-6 Typical Cable Magnitude and Phase Stability Response

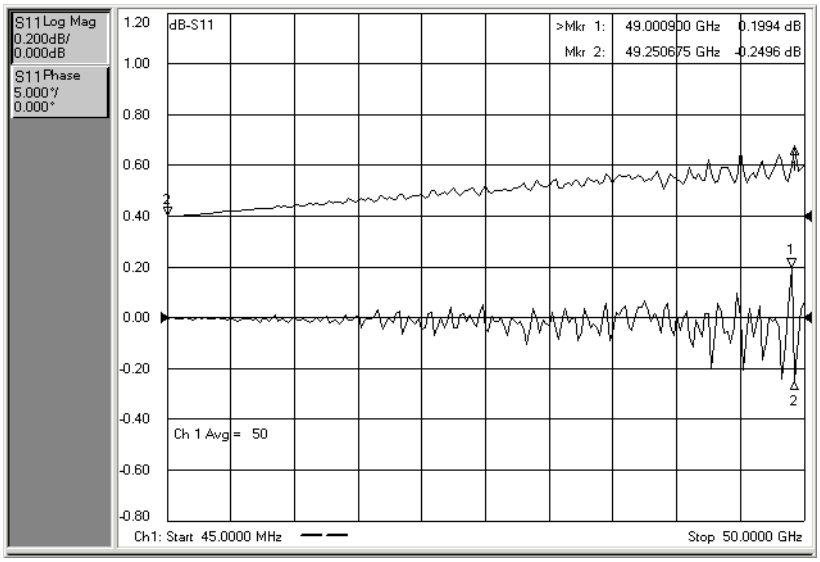

If the Cable Magnitude and Phase Stability Check Fails

1. Clean the cable and devices and torque to specification. Repeat the check.
2. If the check still fails, the cable should be repaired or replaced.

Cable Connector Repeatability Check

NOTE The connector repeatability measurement should be done at the test port as well as at the end of the test port cable.

1. With the test port cable still connected to Port 1, connect a broadband load to the other end of the cable.
2. Press **Preset**.
3. On the **Channel** menu, click **Average**. In the **Average** dialog box, click the **Average ON** check box. In the **Average Factor** box, type 100 or click the arrows to select 100. Click **OK**.
4. Wait for the analyzer to average the measurement 100 times (approximately five seconds).
5. To normalize the data trace:
   a. On the **Trace** menu, click **Math/Memory**.
   b. In the **Math/Memory** dialog box, click the **Data->Memory** button.
   c. In the **Data Math** list, select **Data/Memory**.
   d. Under **Trace View Options**, make sure **Data Trace** is selected.
   e. Click **OK**
6. To adjust the display scale:
   a. On the **Scale** menu, click **Scale**.
   b. In the **Scale Per Division** box, click the arrow to select **0.5 dB**.
   c. In the **Level** box under **Reference** click the arrow to select **0 dB**.
   d. Click **OK**.
7. Disconnect and then reconnect the cable to the test port. Tighten the connection to the specified torque for the connector type.
8. On the **Channel** menu, click **Restart Avg**.
9. Look at the trace for spikes or modes.
10. To re-normalize the data trace of the reconnected cable:
    a. On the **Trace** menu, click **Math/Memory**.
    b. In the **Math/Memory** dialog box, click the **Data->Memory** button.
    c. Click **OK**.
11. Repeat steps 7 through 9 at least three times to look for modes. Modes appear when a harmonic of the source fundamental frequency is able to propagate through the cable or connector. It is helpful to print a plot of the trace each time to compare several connections. If any mode appears each time the cable is connected and reconnected, measurement integrity will be affected.

    For a typical response of cable connector repeatability, see Figure 3-7.

12. For the Port 2 Check, connect the cable (with the load attached) to Port 2 and repeat steps 2 through 11.

Figure 3-7 Typical Cable Connector Repeatability Response

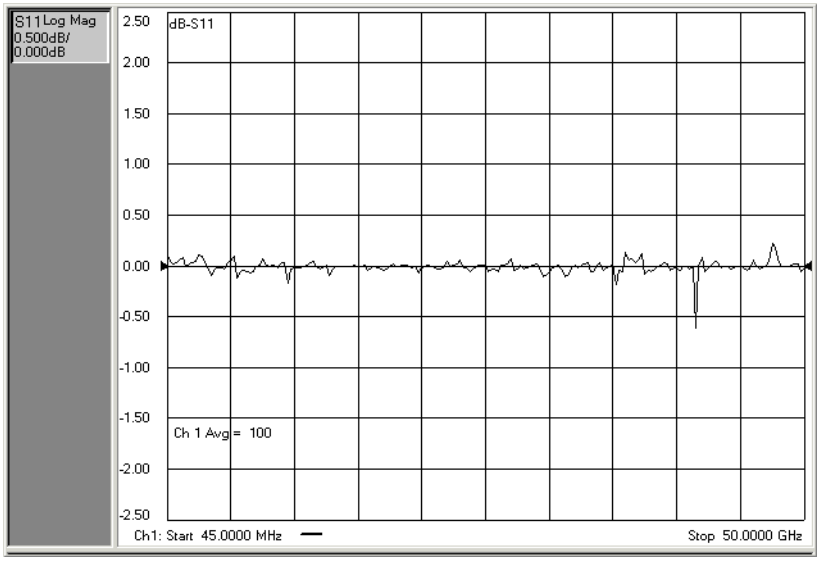

If the Cable Connector Repeatability Check Fails

1. Clean the cable and devices, and torque to specification. Repeat the check.
2. If the check still fails, the cable should be repaired or replaced.

System Verification

System verification is used to verify system-level, error-corrected uncertainty limits for network analyzer measurements. The verification procedure is automated and is contained in the firmware of the analyzer.

The device data provided with the verification kit has a traceable path to a national standard. The difference between the supplied traceable data and the measured data must fall within the total uncertainty limits at all frequencies for the system verification to pass.

The total measurement uncertainty limits for the system verification are the sum of the factory measurement uncertainties for the verification devices and the uncertainties associated with the system being verified. You can determine your system measurement uncertainty limits by referring to the analyzer's on-line embedded help.

IMPORTANT Passing this system verification does not guarantee that the analyzer meets all of its performance specifications. However, it does show that the network analyzer being verified measures the same devices with the same results as a factory system which has had all of its specifications verified and its total measurement uncertainty minimized.

What the System Verification Verifies

The system verification procedure verifies proper operation of the:

- network analyzer
- calibration kit
- test port cables (with any necessary adapters)

together as a "system". It DOES NOT verify that any of these components pass their specifications independently. The user is responsible for independently calibrating and verifying the proper operation of the calibration kit and test port cables prior to performing the system verification.

NOTE Additional equipment or accessories used with the above system are not verified by system verification.

Measurement Uncertainty

Measurement uncertainty is defined as the sum of:

- the residual systematic (repeatable) errors, and
- the random (non-repeatable) errors

in the measurement system after calibration.

The systematic errors are:

- directivity,
- source match,
- load match,
- reflection and transmission frequency tracking, and
- isolation (crosstalk).

The random errors include:

- noise,
- drift,
- connector repeatability, and
- test cable stability.

A complete description of system errors and how they affect measurements is provided in the analyzer's on-line embedded help.

Any measurement result is the vector sum of the actual test device response plus all error terms. The precise effect of each error term depends on its magnitude and phase relationship to the actual test device response. When the phase of an error response is not known, phase is assumed to be worst-case (–180° to +180°). Random errors such as noise and connector repeatability are generally combined in a root-sum-of-the-squares (RSS) manner.

Measurement Traceability

To establish a measurement traceability path to a national standard for a network analyzer system, the overall system performance is verified through the measurement of devices that have a traceable path. This is accomplished by measuring the devices in an Agilent verification kit.

The measurement of the devices in the verification kit has a traceable path because the factory system that measured the devices is calibrated and verified by measuring standards that have a traceable path to the National Institute of Standards and Technology (NIST) (see Figure 3-8). This chain of measurements defines how the verification process brings traceability to the network analyzer system.

Figure 3-8 NIST Traceability Path for Calibration and Verification Standard

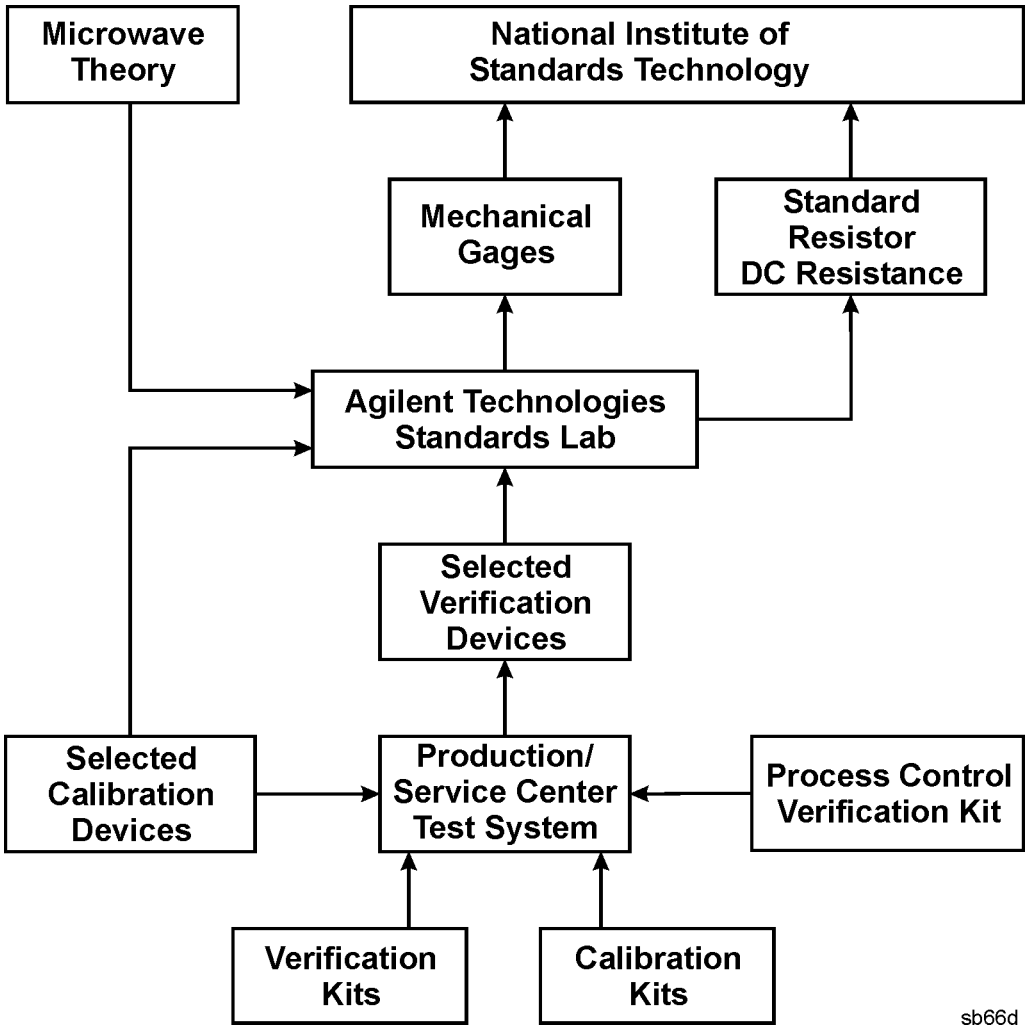

Performing System Verification

The following verification procedure is automated by the analyzer firmware. The process for the verification is:

- connect cables to the analyzer test ports
- perform a calibration or recall a recent calibration
- run the system verification program for the verification devices

To verify all four ports, it is necessary to perform the verification process outlined above twice—once for ports 1 and 2 and once for ports 3 and 4.

Each time through the verification process, you are prompted to make necessary connections and perform or recall a calibration as part of performing the verification. If you select to perform a calibration, you are guided through the calibration procedure. This part of the process can be eliminated if you choose to load an existing recent calibration. If necessary, refer to the analyzer's on-line embedded help for information on storing and recalling calibrations.

For each verification device, the analyzer reads a file from the verification disk and sequentially measures the magnitude and phase for all four S-parameters.

IMPORTANT For system verification to perform correctly, it is NECESSARY that the verification devices be measured with their female connectors connected to the analyzer's test ports.

NOTE Although the performance for all S-parameters are measured, the S_{11}, S_{22}, S_{33}, and S_{44} phase uncertainties for the attenuators and airlines are less important for verifying system performance. Therefore, the limit lines will not appear on the printout.

Equipment Used in the System Verification Procedure

Equipment Type	3.5 mm	Type-N
Calibration kit	85052B, C, D N4691A E-cal	85054B/D N4690A E-cal
Verification kit	85053B	85055A
Cables	Single cable: 85131C/E Cable pair: 85131D/F	Single cable: 85132C/E (3.5 mm NMD to 7 mm) Cable pair: 85132D/F (3.5 mm NMD to 7 mm)
Adapters	None required.	With single cable: an 85130C adapter and a 7mm to Type-N adapter from the 85054B calibration kit. With cable pair: Two 7mm to Type-N adapters from the 85054B calibration kit.

Cable Substitution

The test port cables specified for the network analyzer system have been characterized for connector repeatability, magnitude and phase stability with flexing, return loss, insertion loss, and aging rate. Since test port cable performance is a significant contributor to the system performance, cables of lower performance will increase the uncertainty of your measurement. Refer to the plots in the cable tests (earlier in this chapter) that show the performance of good cables. It is highly recommended that the test port cables be regularly tested.

If the system verification is performed with a non-Agilent cable, ensure that the cable meets or exceeds the specifications for the test cable specified in the previous table, "Equipment Used in the System Verification Procedure." Refer to the cable's user's guide for specifications.

Kit Substitution

Non-Agilent calibration kits and verification kits are not recommended nor supported.

System Verification Procedure

1. If you desire printed test outputs, connect a printer to the analyzer. For the printer, ensure that the correct driver is loaded and the printer is defined as the default printer. Refer to the embedded help in the analyzer for printer setup. Let the analyzer warm up for at least 90 minutes.
2. Insert the verification kit disk into the analyzer disk drive.
3. On the **System** menu, point to **Service**, and then click **System Verification**. The **System Verification** dialog box is displayed; refer to Figure 3-9.

Figure 3-9 System Verification Dialog Box

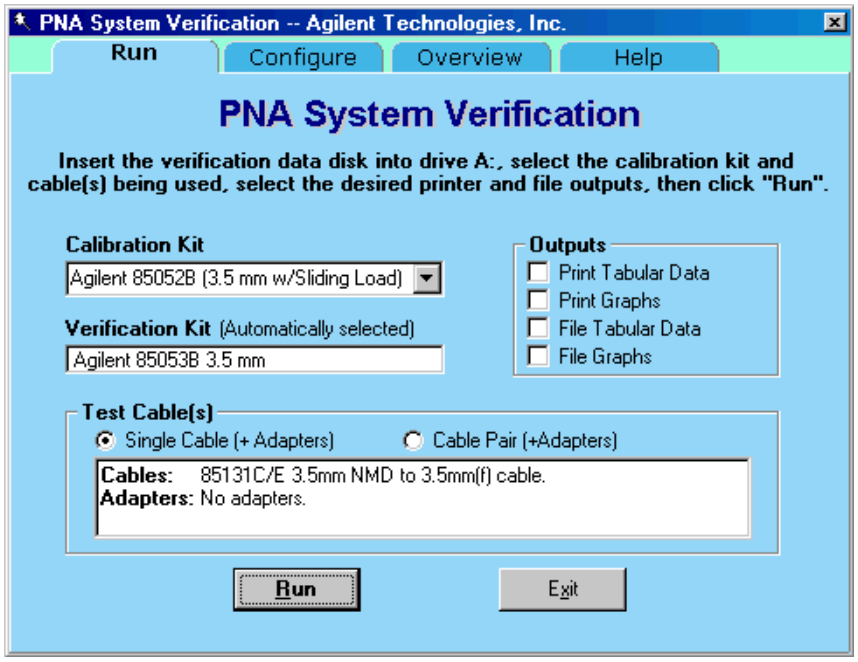

4. In the **Calibration Kit** box, select the calibration kit or electronic calibration module (ECal) that is being used by clicking on it. The corresponding verification kit to use is selected for you and displayed in the **Verification Kit** box. Refer to Figure 3-9.
5. Under **Printer Output,** click one of the following options. Refer to Figure 3-9.
   - **Print Tabular Data**: Prints the verification data in tabular form which includes measured data and uncertainty limits. For an example, refer to Figure 3-11 on page 3-26.
   - **Print Graphs**: Prints the verification data in graphical form. The graphical form includes the measured data trace, factory supplied data trace, and uncertainty limits. For an example, refer to Figure 3-12 on page 3-27.
   - **File Tabular Data**: Writes the tabular data to a text file in the C:\Program Files\Agilent\Network Analyzer\Documents\ directory.
   - **File Graphs**: Saves a screen image in PNG format in the C:\Program Files\Agilent\Network Analyzer\Documents\ directory.

NOTE For printed output, it is assumed that the printer has been tested and the Windows driver is installed for the printer that is being used. The system verification test prints to the printer that has been designated as the default printer. (On the Windows Desktop display, click on **My Computer**, **Control Panel**, and then **Printers** to verify the printer setup.)

To modify the number of ports to be verified or to change the number of devices to measure, click on the **Configure** tab and make the desired selections.

6. Click **Run**.
7. Follow the instructions on the analyzer for performing a full calibration or recalling an existing recent calibration.
8. Follow the instructions on the analyzer for performing the system verification, inserting the verification devices as prompted.

If the System Fails the Verification Test

IMPORTANT Inspect all connections. *Do not* remove the cable from the analyzer test port. This *will invalidate* the calibration that you performed earlier.

1. Disconnect and clean the device that failed the verification test.
2. Reconnect the device making sure that all connections are torqued to the proper specifications.
3. Measure the device again.
4. If the analyzer still fails the test, check the measurement calibration by viewing the error terms as described in "Accessing Error Terms" on page A-8.
5. Refer to Figure 3-10 for additional troubleshooting steps.

Figure 3-10 System Verification Failure Flowchart

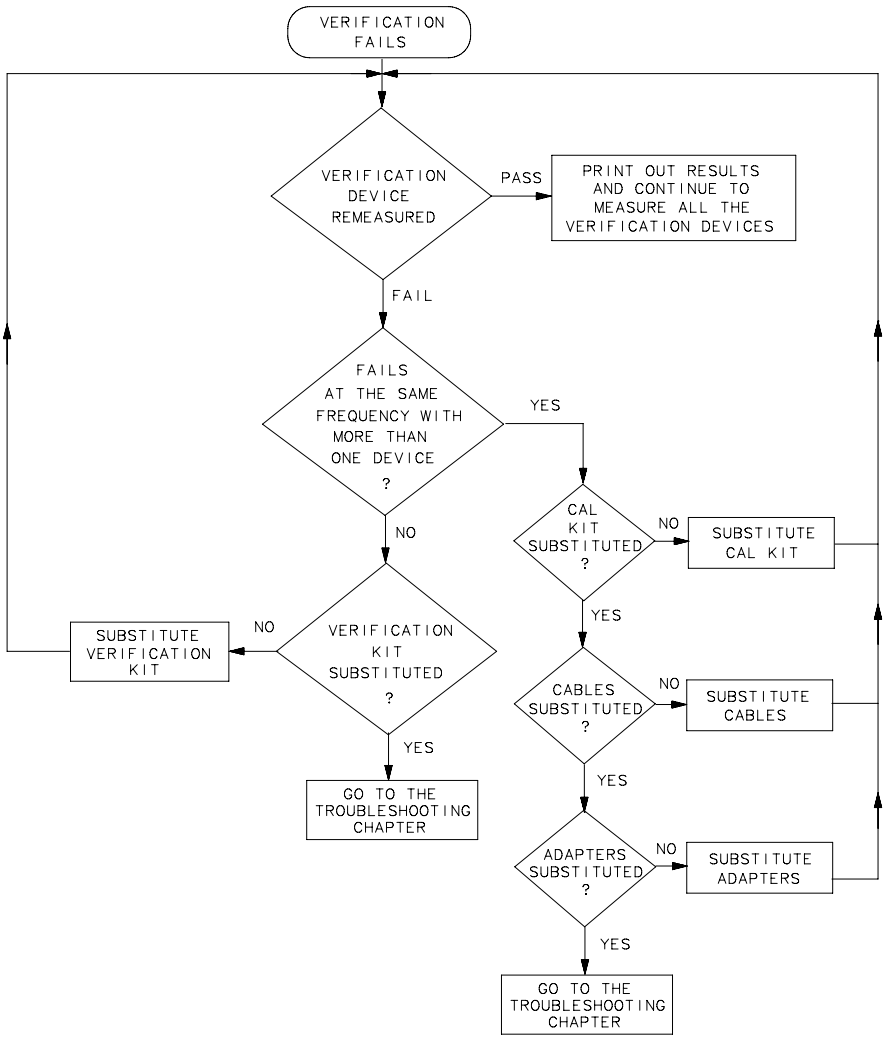

Interpreting the Verification Results

Figure 3-11 shows an example of typical verification results with **Print Tabular Data** selected in the **Printer Output** area of the **System Verification** dialog box.

At the top of the printed output is the name of the device, the serial number of the device, and the date tested.

Each S-parameter measurement result is printed with frequency tested, lower and upper limit lines, the measured data, and the result of the test.

Figure 3-11 Example of Printed Tabular Verification Results

Sys Ver -- 20 dB attenuator magnitude results, Serial #00810 -- 6 Sep 2000

S11 Results

Frequency	Lower Limit	Measured Data	Upper Limit	Result
0.3 MHz	0.0048 Units	0.0090 Units	0.0139 Units	PASS
100	0.0046	0.0091	0.0137	PASS
200	0.0042	0.0092	0.0134	PASS
300	0.0040	0.0091	0.0133	PASS
400	0.0038	0.0089	0.0131	PASS
500	0.0036	0.0087	0.0129	PASS
600	0.0034	0.0085	0.0127	PASS
700	0.0031	0.0082	0.0125	PASS
800	0.0029	0.0080	0.0122	PASS
900	0.0026	0.0079	0.0119	PASS
1000	0.0023	0.0075	0.0117	PASS
1100	0.0020	0.0072	0.0114	PASS
1200	0.0017	0.0068	0.0111	PASS
1300	0.0013	0.0064	0.0107	PASS
1400	-0.0006	0.0059	0.0118	PASS
1500	-0.0011	0.0052	0.0113	PASS
1600	-0.0015	0.0044	0.0108	PASS
1700	-0.0020	0.0038	0.0103	PASS
1800	-0.0026	0.0032	0.0097	PASS
1900	-0.0031	0.0024	0.0091	PASS
2000	-0.0036	0.0019	0.0085	PASS
2100	-0.0045	0.0016	0.0082	PASS
2200	-0.0050	0.0018	0.0077	PASS
2300	-0.0054	0.0023	0.0073	PASS
2400	-0.0052	0.0031	0.0075	PASS
2500	-0.0048	0.0039	0.0080	PASS
2600	-0.0040	0.0050	0.0087	PASS
2700	-0.0032	0.0060	0.0094	PASS
2800	-0.0024	0.0071	0.0103	PASS
2900	-0.0014	0.0082	0.0113	PASS
3000	-0.0004	0.0095	0.0124	PASS

Overall PASS/FAIL result for entire frequency range = PASS

Figure 3-12 shows an example of typical verification results with **Print Graphs** selected in the **Printer Output** area of the **System Verification** dialog box. The printed graphical results show the following:

- the name of the device measured
- the serial number of the device
- the parameters measured
- Results of the measurements. Labeled as A in Figure 3-12.
- Data measured at the factory from the verification kit. Labeled as B in Figure 3-12.
- Upper and lower limit points as defined by the total system uncertainty system. Labeled as C in Figure 3-12.

Figure 3-12 Example of Printed Graphical Verification Results

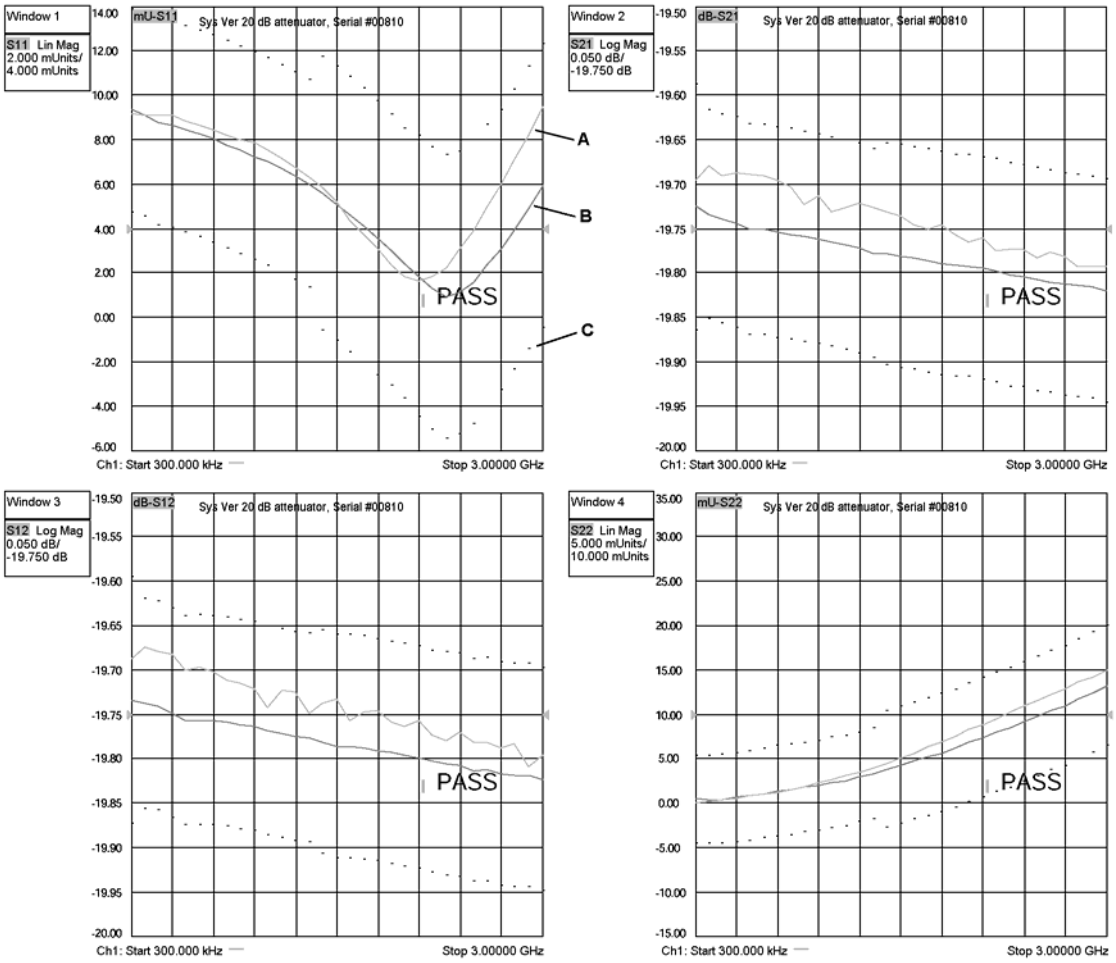

Performance Tests (Agilent N7840A Software Package)

The Agilent N7840A software package verifies the electrical performance of your N5230A microwave PNA. The software automatically configures your analyzer to execute the performance tests. The N7840A software package is not included with the analyzer; it must be ordered separately. The model numbers of the equipment used are specified under "Required Service Test Equipment" on page 2-7.

There are nine tests in the software package:

- Source Power Accuracy Test
- Source Maximum Power Output Test
- Source Power Linearity Test
- Frequency Accuracy Test
- Trace Noise Test
- Receiver Compression Test
- Noise Floor Test
- Calibration Coefficients Test
- Dynamic Accuracy Test

Source Power Accuracy Test

Function of the Test: To confirm the accuracy of the source output power of your network analyzer over its full frequency range.

Specification Tested: Test Port Output–Power Level Accuracy

Equipment Used: A power meter, power sensors, and adapters.

Description of the Test:

1. The analyzer's output power level is set to 0 dBm.
2. A power sensor is connected to Port 1.
3. The output power is measured at hundreds of CW frequencies across the analyzer's frequency range and the values compared to the setting of 0 dBm.

If the Analyzer Fails this Test:

- Perform the "Source Calibration Adjustment" on page 3-42 and repeat this test.
- If the analyzer still fails this test, troubleshoot the source section of the analyzer and then repeat this test. Refer to "Checking the Source Group" on page 4-32.

Source Maximum Power Output Test

Function of the Test: To confirm the maximum source output power of your network analyzer over its full frequency range.

Specification Tested: Test Port Output–Maximum Leveled Power

Equipment Used: A power meter, power sensors, and adapters.

Description of the Test:

1. A power sensor is connected to Port 1.
2. The analyzer's output is set to hundreds of CW frequencies and, at each frequency, the output power is increased until an "UNLEVELED" error is detected.
3. The power level at this point is measured and compared to the maximum output power specification.

If the Analyzer Fails this Test:

- Go to "Checking the Signal through the Signal Separation Path" on page 4-46 for troubleshooting information to determine the faulty assembly.

Source Power Linearity Test

Function of the Test: To verify that the power level is linear over the analyzer's frequency range and to check the linearity of the automatic leveling control (ALC).

Specification Tested: Power Sweep Range and Power Level Linearity

Equipment Used: A test cable. (And a 20 dB attenuator if the analyzer does not have an internal step attenuator.)

Description of the Test:

1. The Port 2 receiver is used to test Port 1. The receiver linearity is the standard against which the source linearity is checked.
2. A test cable is connected between Port 1 and Port 2 with 20 dB of attenuation in series with the cable. This can be done with an internal step attenuator or an external 20 dB attenuator. This attenuation ensures that the receiver remains in its linear range.
3. The analyzer is set to 25 different points across its frequency range.
4. At each frequency point, the output power level on Port 2 is set to 0.000 dBm and the power is measured to establish a reference, $P_{reference}$.
5. The source setting is then stepped from –15 to +10 dBm in 1 dB steps and the power is measured, $P_{measured}$, at each setting.
6. The non-linearity in dB at each frequency point is calculated as:

   $(P_{measured} - P_{reference})$ – (source setting)

If the Analyzer Fails this Test:

- Perform the "Source Calibration Adjustment" on page 3-42 and repeat this test.
- If the analyzer still fails this test, replace the A19 MASSQuad and then repeat this test. Refer to "Removing and Replacing the A19 MASS 26.5 (MASSQuad) and MASSQuad Mounting Block" on page 7-32.

Frequency Accuracy Test

Function of the Test: To verify the frequency accuracy and range of the analyzer's source output.

Specification Tested: Test Port Output–CW Accuracy

Equipment Used: A frequency counter, a test cable, and adapters.

Description of the Test:

1. Port 1 is connected to a frequency counter.
2. A series of frequencies across the band are checked.

If the Analyzer Fails this Test:

- Verify the accuracy of the 10 MHz OCXO by using a frequency counter to measure the rear-panel 10 MHz REF OUT. If the 10 MHz reference is off by more than 10 Hz, perform the "10 MHz Frequency Reference Adjustment" on page 3-40 and then repeat this test.

Trace Noise Test

Function of the Test: To measure the stability of a signal in the internal source and receiver system of your analyzer.

Specification Tested: Test Port Input–Trace Noise Magnitude and Trace Noise Phase

Equipment Used: A test cable.

Description of the Test:

1. Port 1 and Port 2 are connected with a test cable.
2. The analyzer is set to a series of CW frequencies across its frequency range.
3. Magnitude and phase are measured at each frequency at both 1 kHz and 10 kHz IF bandwidths, in both directions.
4. Measurements are made at a nominal power level of 0 dBm and 201 points per sweep.

If the Analyzer Fails this Test:

- Repeat this test. It is unlikely for the analyzer to fail this test without a complete failure of the network analyzer system.
- If the analyzer still fails this test, replace the A5 SPAM board and then repeat this test. Refer to "Removing and Replacing the A5 through A10 Boards" on page 7-16.

Receiver Compression Test

Function of the Test: To measure the compression at the analyzer's specified maximum power level for the receivers.

Specification Tested: Test Port Input–Maximum Test Port Input Level

Equipment Used: The compression test set (Z5623A Option K01), a power meter, power sensors, two test cables, and a calibration kit. (And 10-dB and 20-dB pads if the analyzer does not have an internal step attenuator.)

Description of the Test:

1. All measurements are made with a 1 kHz IF bandwidth and 201 points per sweep.
2. The measurements are made separately on each port.
3. The analyzer is set to various CW frequencies across the range of the analyzer.
4. A power sensor is connected to the "signal source point" to be used to test the port. The "signal source point" may be either the port connector itself, when a short is used, or the end of the test cable, when the compression test set is used to source the test signal.
5. The analyzer source output level is adjusted to create the maximum power level specified for the receiver.
6. The power sensor is disconnected and the "signal source point" is connected to the port to be tested.
7. The absolute log magnitude value (dBm) for the reference channel is read.
8. The log magnitude ratioed measurement using the receiver under test is read: (P_a).
9. The source output level is adjusted to decrease the output by 15 dB.
10. The log magnitude ratioed measurement using the receiver under test is read: (P_b).
11. Attenuation of 20 dB is introduced between the source and receiver. This can be done with an internal step attenuator, an external 10 dB pad (if a short is being used to reflect the signal back into the port), or an external 20 dB pad (if the signal source is the compression test set).
12. The log magnitude ratioed measurement using the receiver under test is read: (P_c).
13. The source output level is adjusted to produce a reading of Pref (within ±0.03 dBm) for the reference channel on the source port.
14. The log magnitude ratioed measurement using the receiver under test is read: (P_d).
15. The compression in dB = $(P_a–P_b)–(P_d–P_c)$.

If the Analyzer Fails this Test:

- Repeat this test. There are no adjustments that can be made.
- If the analyzer still fails this test, replace the A20 mixer brick then repeat this test. Refer to "Removing and Replacing the A20 Mixer Brick (QuintBrick)" on page 7-34.

Noise Floor Test

Function of the Test: To measure the absolute power level of the noise floor for the analyzer's receivers.

Specification Tested: Test Port Input–Test Port Noise Floor

Equipment Used: A power meter, power sensor, a calibration kit, and a test cable.

Description of the Test:

1. The analyzer is set to various CW frequencies across its frequency range at an IF bandwidth of 1 kHz and 801 points per sweep.
2. A test cable is connected to the driving port for the measurement and a power sensor is connected to the other end of the cable.
3. The power level at the end of the cable is set to –5.00 dBm.
4. The power sensor is disconnected and the cable is connected to the port to be tested.
5. The absolute power level in dBm (log magnitude) is read: (P_{log}).
6. The test cable is removed and loads are connected to both ports.
7. The analyzer's trace is set to represent the absolute power level (linear magnitude) for the receiver under test and a sweep is taken.
8. The mean of the points on the trace, in watts, is read: (P_{lin}).
9. Average power in dBm is calculated: $P_{dBm}=10*Log10(P_{lin}*1000)$.
10. Corrected noise floor in dBm for a 10 Hz IF bandwidth = P_{dBm}–19.96 dB–(5.00-P_{log}).

If the Analyzer Fails this Test:

- If the analyzer fails this test, replace the A20 mixer brick and then repeat this test. Refer to "Removing and Replacing the A20 Mixer Brick (QuintBrick)" on page 7-34.
- If the analyzer still fails this test, replace the A5 SPAM board and then repeat this test. Refer to "Removing and Replacing the A5 through A10 Boards" on page 7-16.

Calibration Coefficients Test

Function of the Test: To verify the uncorrected calibration coefficients of your analyzer. The calibration coefficients are measured in forward and reverse direction. Refer to Appendix A, "Error Terms," for error term information relating to the calibration coefficients measured.

Specification Tested: Uncorrected System Performance

Equipment Used: A calibration kit and a test cable.

Description of the Test:

1. A series of 2-port calibrations are performed. Two full SOLT 2-port calibrations are performed on each port. Isolation is turned off during each 2-port calibration.
2. A test cable is attached to the first port, and a calibration is performed at the end of the cable and at the second port. The cable is moved to the second port and another calibration is performed. Using two calibrations helps to eliminate the unknown characteristics of the through cable.
3. Each calibration produces 12 error terms.
4. The error terms are used to determine the following characteristics: directivity, source match, load match, reflection tracking, and transmission tracking.

If the Analyzer Fails this Test:

- If the analyzer fails tracking error terms only, perform "Receiver Calibration Adjustment" on page 3-43 and repeat this test.
- Failure of any other error terms indicate a hardware failure. Refer to the appropriate error term discussion in Appendix A, "Error Terms," for a typical cause of failure. Refer to Chapter 7, "Repair and Replacement Procedures," for instructions on replacing the suspected faulty component or assembly.

Dynamic Accuracy Test

Function of the Test: To measure the relative power linearity of the analyzer's receivers.

Specification Tested: Test Port Input–Dynamic Accuracy

Equipment Used: The dynamic accuracy test set (Z5623A Option H01), a power meter (E4418B or E4419B Option G12 or Option H12)[1], power sensors, and two test cables.

Description of the Test:

1. The analyzer's test ports are tested separately at a specific CW frequency and a reference power level of –20 dBm.
2. The analyzer's driving port is connected to the dynamic accuracy test set's source port and the analyzer's receiving port is connected to the dynamic accuracy test set's receiver port. A power sensor is connected to the dynamic accuracy test set's power meter port.
3. The dynamic accuracy test set is used to input a signal from the driving port on the analyzer. The input signal is routed through step attenuators to both the analyzer and a power sensor.
4. The analyzer source and the dynamic accuracy test set create power levels that are "deltas" from the reference power level of –20 dBm. Each delta is measured two ways: by the power sensor and by the analyzer's receiver under test.
5. The analyzer's power level into the port under test is set to the –20 dBm reference level.
6. The power level is measured with the power sensor: (P_{mr}).
7. The power level is measured using the analyzer's receiver under test: (P_{pr}).
8. The power level into the analyzer's port under test is stepped, in 5 dB steps, over the range of 0 to –120 dBm. Each power level represents a "delta" from the reference power level.
9. At each step, the power level is measured using the power meter: (P_{md}).
10. At each step, the power level is measured using the receiver under test: (P_{pd}).
11. The power error in dB = $(P_{mr}–P_{md})–(P_{pr}–P_{pd})$.

If the Analyzer Fails this Test:

- If the analyzer fails this test, replace the A20 mixer brick and then repeat this test. Refer to "Removing and Replacing the A20 Mixer Brick (QuintBrick)" on page 7-34.
- If the analyzer still fails this test, replace the A5 SPAM board and repeat this test. Refer to"Removing and Replacing the A5 through A10 Boards" on page 7-16.

1. This test requires a higher accuracy power meter than standard. Refer to "Required Service Test Equipment" on page 2-7 for specifications. If an Option G12 or H12 power meter is not available, refer to the "Power Meter Accuracy Test" on page 3-35 to verify the accuracy of a standard power meter.

Power Meter Accuracy Test

This test is intended for power meters used in testing the PNA. The "Dynamic Accuracy Test" requires the use of a power meter that has been calibrated to a higher accuracy than the standard power meter.

Power meters with options G12 and H12 specify an improved instrumentation accuracy over a limited power range. (These power meters do not contain unique hardware.) A power meter may be returned to the factory to have one of these options added to an existing power meter or to renew the calibration for one of these options.

This test procedure is an alternative to returning the power meter to the factory. When a power meter passes this test, it is considered to be *calibrated* for the G12 or H12 option even though it has not been returned to the factory.

This test procedure is available on the Internet as a separate document, Agilent Part Number E8356-90051. The on-line document may have a more recent print date. Refer to "Contacting Agilent" on page 2-11 for the Internet address (URL).

EPM Series Power Meters That Can Be Tested Using This Procedure

This procedure assumes that the recommended model number power meter is being tested. The alternate model numbers can be tested but the necessary procedural steps may differ.

Recommended Model Number	Alternate Model Numbers
E4419B	E4418A/B, E4419A, EPM-441A, EPM-442A

NOTE It is recommended that the revision number for the power meter "Main Firmware" be Ax.03.00 or higher. This applies to all power meter model numbers listed above (both recommended and alternate).

Equipment Used for the Power Meter Accuracy Test

Equipment Type	Recommended Model or Part Number	Alternate Model or Part Number
Range calibrator	11683A	None
Precision digital voltmeter	3458A	Any with the required accuracy and resolution[a]
Power sensor cable	8120-8319, 11730A	Any equivalent
Cable, BNC, 50W	Any	Any
Adapter for connecting BNC cable to DVM inputs	Any	Any

a. Required accuracy and resolution at the following voltage levels:

14 mV input:	0.0100% accuracy	10 nV resolution
0.140 V input:	0.0050% accuracy	100 nV resolution
0.450 V input:	0.003% accuracy	100 nV resolution

Description of the Test

The power meter accuracy is verified for various power inputs and the actual readings are recorded in a test record. A range calibrator is used to provide the reference inputs.

NOTE It is recommended that a copy of the test record on page 3-39 be made, and the values be recorded on the copy, thus preserving the original for future use.

Test Procedure

NOTE This procedure assumes the use of the recommended equipment model numbers. The actual steps required, therefore, may differ for other model numbers of equipment used.

1. Setup the equipment as shown in Figure 3-13:
   a. Connect the DC REFERENCE OUTPUT connector on the rear panel of the range calibrator to the DVM voltage input.
   b. Connect the POWER METER output of the range calibrator to the input of the power meter being tested.
   c. Switch on the power to the power meter, the range calibrator, and the digital voltmeter.

Figure 3-13 Setup for the Power Meter Accuracy Test

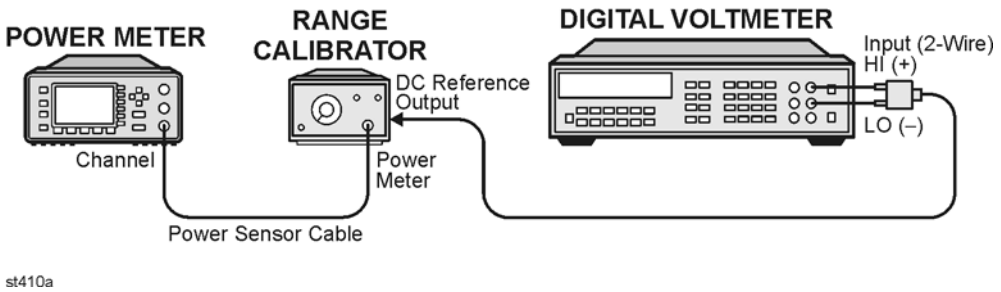

2. Preset the power meter: Press **[Preset/Local]**, then **Confirm**.
3. Perform the following steps for each channel on the power meter:
   a. Set to read in dBm: Press **[dBm/W]**, then **dBm**.
   b. Set the ref cal factor to 100%: Press **[Zero/Cal]**, **Cal**, **A/B Ref CF**, then set to **100.0**, if necessary.
   c. Set the cal factor to 100%: Press **[Frequency/Cal Fac]**, **A/B Cal Fac**, then set to **100.0**, if necessary.
   d. Set readout to 0.001 dBm: Press **[Meas Setup]**, then **Resolution 1 2 3 4**, to highlight **4**.
   e. Set filter step detect on and filter length to 512: Press **[System/Inputs]**, channel **A** or **B Input Settings**, **[More]**, **Ch A/B Filter**, **Step Det On**, **Filter On**, **Mode MAN**, **Length**, then set the filter length to **512**.

4. Setup the digital voltmeter (DVM) as follows:
   a. Reset the DVM: Press the **blue key** followed by **Reset**.
   b. Set the sample period to a value greater than one second: Press **NPLC**, **5**, **0**, then **Enter**.
5. Set the range calibrator controls as follows:

   POLARITY . . . . . NORMAL
   RANGE. . . . . 1 mW
   FUNCTION . . . . . CALIBRATE
6. Allow the equipment to warm up for approximately 30 minutes. Do not change any connections or control settings during this time.
7. Zero and calibrate the power meter channel to which the range calibrator is connected:
   a. The range calibrator's RANGE switch should be set to 1 mW.
   b. Set the range calibrator's FUNCTION switch to STANDBY.
   c. Press **[Zero/Cal]**, then **Zero A** or **Zero B** (as appropriate). Wait for the operation to complete.
   d. Set the range calibrator's FUNCTION switch to CALIBRATE.
   e. Press **[Zero/Cal]**, **Cal**, then **Cal A** or **Cal B** (as appropriate). Wait for the operation to complete.
8. Monitor the drift rate of the power meter reading: Five minutes following calibration, the meter must read 0.001, 0.000, or –0.001 dBm. If the power meter reading is not one of these values, allow additional warm up time, then check the drift rate again. The range calibrator must remain connected to the power meter during this warm up time.
9. Zero and calibrate the power meter channel to which the range calibrator is connected:

NOTE After a channel on the power meter is calibrated, do not allow more than 5 minutes to elapse before completing the remaining measurement steps for that channel.

   a. The range calibrator's RANGE switch should be set to 1 mW.
   b. Set the range calibrator's FUNCTION switch to STANDBY.
   c. Press **[Zero/Cal]**, then **Zero A** or **Zero B** (as appropriate). Wait for the operation to complete.
   d. Set the range calibrator's FUNCTION switch to CALIBRATE.
   e. Press **[Zero/Cal]**, **Cal**, then **Cal A** or **Cal B** (as appropriate). Wait for the operation to complete.
10. Record the DVM voltage reading as value A in the test record on page 3-39.

NOTE All DVM readings in this procedure should be recorded showing five significant digits.

11. The reading on the power meter should be 0.000 ±0.001 dBm.

12. Switch the range calibrator RANGE to 300 µW.
13. Record the DVM voltage reading as value B in the test record.
14. Wait for the power meter reading to settle (no settling drift within 20 seconds).
15. Record the power meter reading as value C in the test record.
16. Switch the range calibrator RANGE to 100 µW.
17. Record the DVM voltage reading as value D in the test record.
18. Wait for the power meter reading to settle (no settling drift within 20 seconds).
19. Record the power meter reading as value E in the test record.
20. If testing a dual-channel power meter, perform steps 7 through 19 for the other channel.
21. Perform the pass/fail calculations indicated on the test record.

NOTE If a channel of the power meter does not pass this test, the power meter cannot be used in applications that require Option G12 or H12. There are no adjustments that can be performed to improve the performance of the power meter. Typically, replacing the A6 measurement assembly associated with the failed channel will correct the problem.

TEST RECORD FOR POWER METER ACCURACY TEST

Power Meter Tested: Model No.: _____ Serial No: _____

Date: _____ **Tested by:** _____

Test Equipment Used

Range Calibrator: Model No.: **11683A** Serial No.: _____

Digital Voltmeter: Model No.: _____ Serial No.: _____

Test Results

Range Calibrator Setting	Channel A		Channel B	
	DVM Reading (Vdc)	Power Meter Reading (dBm)	DVM Reading (Vdc)	Power Meter Reading (dBm)
1 mW	A =	0.000 ±0.001	A =	0.000 ±0.001
300 µW	B =	C =	B =	C =
100 µW	D =	E =	D =	E =

Pass/Fail Calculations

300 µW	R = B/A = _____ S = $10^{(C/10)}$ = _____ % ERROR = ((R-S)/R) × 100 = _____ % Limits: ±0.13% Pass ☐ Fail ☐	R = B/A = _____ S = $10^{(C/10)}$ = _____ % ERROR = ((R-S)/R) × 100 = _____ % Limits: ±0.13% Pass ☐ Fail ☐
100 µW	T = D/A = _____ U = $10^{(E/10)}$ = _____ % ERROR = ((T-U)/T) × 100 = _____ % Limits: ±0.10% Pass ☐ Fail ☐	T = D/A = _____ U = $10^{(E/10)}$ = _____ % ERROR = ((T-U)/T) × 100 = _____ % Limits: ±0.10% Pass ☐ Fail ☐

Adjustments

These adjustments are firmware-driven tests that are used to fine-tune your analyzer.

If multiple adjustments are to be performed, perform them in the order listed.

- "10 MHz Frequency Reference Adjustment" on page 3-40
- "LO Power Adjustment" on page 3-41
- "Source Calibration Adjustment" on page 3-42
- "Receiver Calibration Adjustment" on page 3-43

10 MHz Frequency Reference Adjustment

The 10 MHz frequency adjustment is used to adjust the frequency accuracy of the network analyzer's 10 MHz frequency reference on the A10 frequency reference board assembly.

Equipment Used for the Frequency Adjustment at 10 MHz

Equipment Type	Model or Part Number	Alternate Model or Part Number
Cable, BNC, 50Ω, 24 inch	8120-1839	Any
Frequency counter	53151A, Option 001	Any that will measure a signal at 10 MHz.

Procedure

NOTE This adjustment typically adjusts to within ±0.01 ppm.

1. Connect the equipment as shown in Figure 3-14. Connect a GPIB cable between the network analyzer and the frequency counter.

Figure 3-14 Setup for Adjustment of the 10 MHz Frequency Reference

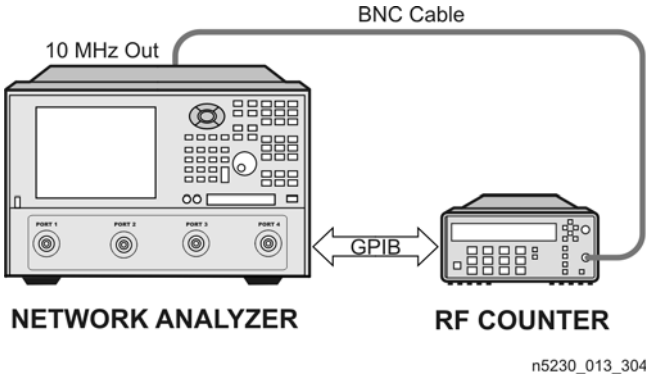

2. On the **System** menu, point to **Service**, **Adjustments**, and then click **10 MHz Freq Adjust**.
3. Ensure the GPIB settings are correct.
4. Click **Begin Adj**, and then follow the instructions as they are displayed.

LO Power Adjustment

The LO power adjustment is used to adjust the power level of the LO signal from the A6 multiplier board to the A20 mixer brick.

Equipment used for the LO Power Adjustment

Equipment Type	Model or Part Number	Alternate Model or Part Number
Power meter	E4418B/E4419B	E4418A/E4419A
Power sensor, 3.5 mm	E4413A	8485A
5/16-inch, open-end torque wrench (set to 10 in-lbs)	N/A	N/A

Procedure

1. Turn off the network analyzer and remove the power cable and other external cables from the rear panel.
2. Remove the outer cover. Refer to "Removing the Covers" on page 7-6.
3. Place the analyzer on its side to allow access to the bottom of the analyzer.
4. Connect a GPIB cable between the analyzer and the power meter.
5. With a 5/16 inch open-end wrench, disconnect cable W3 at the A20 mixer brick. Refer to "Bottom Cables, Options 140 and 240" on page 6-22 to determine the location of cable W3.
6. Connect the power sensor to the end of cable W3.
7. Reconnect the power and USB cables. Turn on the analyzer.
8. On the **System** menu, point to **Service**, **Adjustments**, and then click **LO Power Adjust**.
9. Ensure the GPIB settings are correct.
10. Click **Begin Adj**, and then follow the instructions as they are displayed.
11. Turn off the analyzer, disconnect the power cable, reconnect the semi-rigid cable W3, and replace the cover.

Source Calibration Adjustment

The source calibration is used to adjust your network analyzer for a flat source power across its full frequency range. There are differences between each test port; therefore, an adjustment is required for each port.

Equipment Used for the Source Calibration Adjustment

Equipment Type	Model or Part Number	Alternate Model or Part Number
Power meter	E4418B/E4419B	E4418A/E4419A
Power sensor, 3.5 mm	E4413A	8485A
Adapter, 3.5 mm (f) to 3.5 mm (f)	83059B	85052-60012

Procedure

1. Connect the equipment as shown in Figure 3-15. Connect a GPIB cable between the network analyzer and the power meter.

Figure 3-15 Setup for the Source Calibration Adjustment

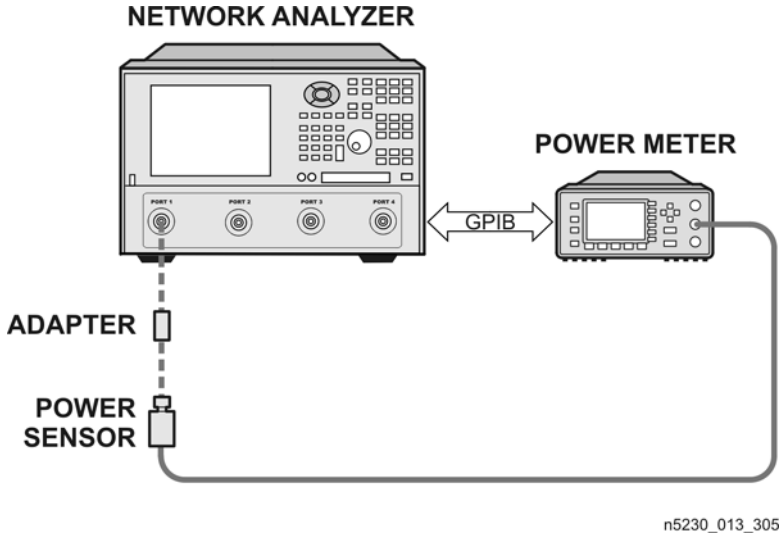

2. On the **System** menu, point to **Service**, **Adjustments**, and then click **Source Calibration**.
3. Ensure the GPIB settings are correct.
4. Click **Calibrate**, and then follow the instructions as they are displayed.

Receiver Calibration Adjustment

The receiver calibration is used to adjust the network analyzer receivers for a flat response across its full frequency range:

1. A power meter/sensor is connected to Port 1, as shown in Figure 3-16, to establish a reference for flatness.
2. A cable is inserted between the power sensor and the test port, as shown in Figure 3-17, to establish a reference for the cable.
3. The same cable is connected between test port 1 and test port 2, as shown in Figure 3-18, and a signal from Port 1 is used to adjust the “B” receiver at Port 2.

   The adjustment is repeated using a signal from Port 2 to adjust the “A” receiver at Port 1.

Data obtained during this adjustment are stored in the mxcalfile_pxx files on the hard disk drive. The data are used in subsequent measurements.

If the hard disk drive is replaced, these mxcalfile_pxx files will be lost. Therefore, they should be backed up (saved on a floppy disk) so that they can be restored. If using multiple disk drives (e.g. classified and general usage), then these files must be replaced on each individual disk drive.

These files can be recreated by performing another receiver calibration adjustment.

Equipment Used for the Receiver Calibration Adjustment

Equipment Type	Model or Part Number	Alternate Model Part Number
Power meter	E4418B/E4419B	E4418A/E4419A
Power sensor, 3.5 mm	E4413A	8485A
Adapter, 3.5 mm (f) to 3.5 mm (f)	83059B	85052-60012
RF Cable, 3.5 mm (f) to 3.5 mm (f)	85131C	85131E

Procedure

1. Connect the equipment as shown in Figure 3-16. Connect a GPIB cable between the network analyzer and the power meter.

Figure 3-16 Setup 1 for the Receiver Calibration Adjustment

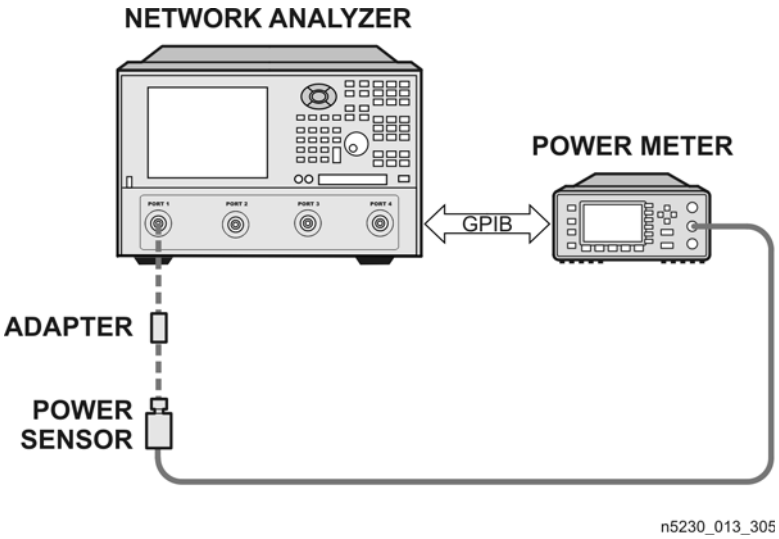

2. On the **System** menu, point to **Service**, **Adjustments**, and then click **Receiver Calibration**.
3. Ensure the GPIB settings are correct.
4. Click **Calibrate**, and then follow the instructions as they are displayed.

Figure 3-17 Setup 2 for the Receiver Calibration Adjustment

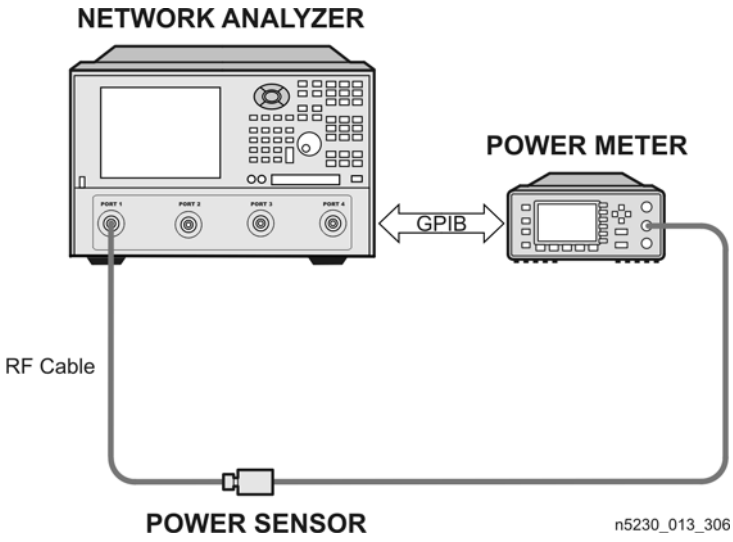

Figure 3-18 Setup 3 for the Receiver Calibration Adjustment

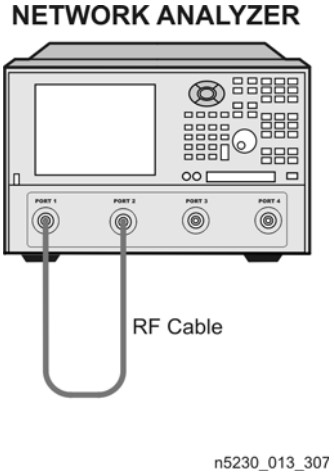

4 Troubleshooting

Information in This Chapter

The information in this chapter helps you:

- Identify the portion of the analyzer at fault.
- Locate the specific troubleshooting procedure to identify the assembly or peripheral at fault.

The sections in this chapter are arranged in a logical troubleshooting order. The following table lists the sections and a brief summary of what to look for in that section.

Chapter Four at-a-Glance

Section Title	Summary of Content	Start Page
'Getting Started with Troubleshooting'	A starting point to begin troubleshooting.	Page 4-4
'Power Up Troubleshooting'	Power-up problems: • Power supply problems • LCD problems • Bootup for the network analyzer interface	Page 4-6
'Front Panel Troubleshooting'	Problems occurring after the network analyzer interface is loaded: • Does the display color appear correct? • Do the front panel keys function properly? • Does the front panel USB connector function properly?	Page 4-16
'Rear Panel Troubleshooting'	Problems associated with the rear panel interconnects. *The data found at these rear panel interconnects can be used to troubleshoot the CPU board.*	Page 4-20
'Measurement System Troubleshooting'	Problems with the measurement portion of the analyzer. • Checking the A, B, C, D, and R signals. • Checking the source group. • Checking the signal separation group. • Checking the receiver group.	Page 4-26
Instrument Block Diagrams	Block diagrams for the analyzer including all options.	Page 4-51

Protect Against Electrostatic Discharge (ESD)

This is important. If not properly protected against, electrostatic discharge can seriously damage your analyzer, resulting in costly repair.

CAUTION To reduce the chance of electrostatic discharge, follow all of the recommendations outlined in "Electrostatic Discharge Protection" on page 1-6, for all of the procedures in this chapter.

Assembly Replacement Sequence

After identifying the problem requiring an assembly to be replaced, follow these steps:

Step 1. Order a replacement assembly. Refer to Chapter 6, "Replaceable Parts."

Step 2. Replace the faulty assembly and determine what adjustments are necessary. Refer to Chapter 7, "Repair and Replacement Procedures."

Step 3. Perform the necessary adjustments. Refer to Chapter 3, "Tests and Adjustments."

Step 4. Perform the necessary performance tests. Refer to Chapter 3, "Tests and Adjustments."

Getting Started with Troubleshooting

Where you begin troubleshooting depends upon the symptoms of the failure. Start by checking the basics as outlined in the following section. Also review the flowchart in Figure 4-1 on page 4-5. You should then be able to determine where in the troubleshooting procedure to begin, to locate the failed assembly.

Check the Basics

A problem can often be solved by repeating the procedure you were following when the problem occurred. Before calling Agilent Technologies or returning the instrument for service, please perform the following checks:

1. Is there power at the mains receptacle? If not, correct this situation and proceed.
2. Is the instrument turned on? Check to see if the front panel line switch glows. This indicates the power supply is on. If the front panel line switch is on but the power supply does not appear to be on, go to "Power Up Troubleshooting" on page 4-6.
3. Is the Windows® operating system running? If not, refer to Appendix D, "Operating System Recovery," for instructions.
4. If other equipment, cables, and connectors are being used with the instrument, make sure they are clean, connected properly and operating correctly.
5. Review the procedure for the measurement being performed when the problem appeared. Are all the settings correct? If not, correct them.
6. If the instrument is not functioning as expected, return the unit to a known state by pressing the **Preset** key.
7. Is the measurement being performed, and the results that are expected, within the specifications and capabilities of the instrument? Refer to the embedded help in the analyzer for instrument specifications.
8. If the problem is thought to be due to firmware, check to see if the instrument has the latest firmware before starting the troubleshooting procedure. Refer to Appendix C, "Firmware Upgrades," for instructions.
9. If the necessary test equipment is available, perform the operator's check and system verification in Chapter 3, "Tests and Adjustments."

Windows® is a U.S. registered trademark of Microsoft Corporation.

Troubleshooting Organization

Follow the flowgraph in Figure 4-1 to help direct you to the correct section for troubleshooting the analyzer.

Figure 4-1 Troubleshooting Organization Flowchart

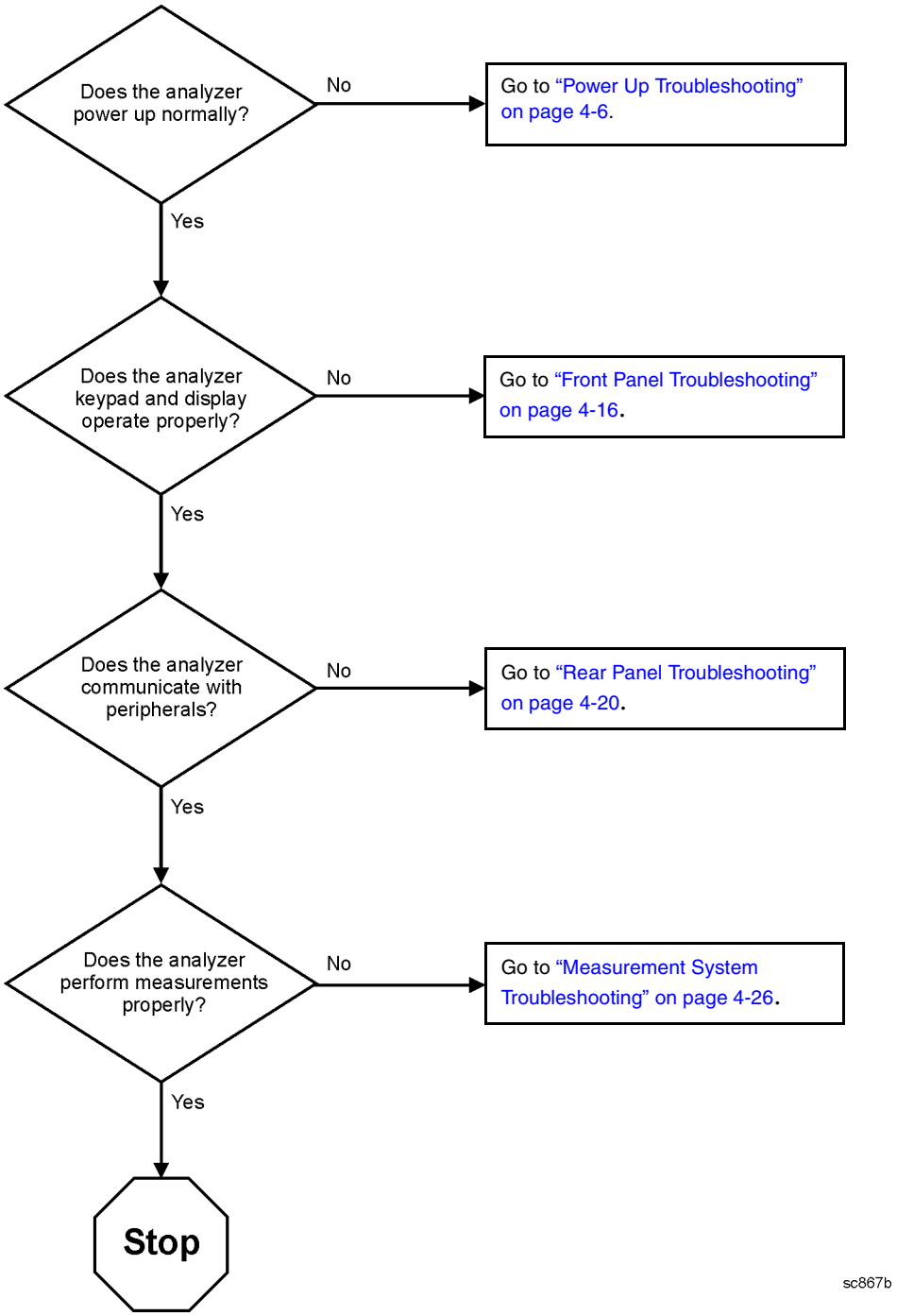

Power Up Troubleshooting

WARNING **Immediately unplug the instrument from the ac power line if the unit shows any of the following symptoms:**

- **Smoke, arcing, or unusual noise from inside the analyzer.**
- **A circuit breaker or fuse on the main ac power line opens.**

Check your network analyzer for evidence that it is powering up correctly. Perform the following steps and make sure that the analyzer is displaying correct behavior as noted in the following steps.

Step 1. Disconnect all peripherals and plug in the network analyzer. Before the analyzer is powered on, the line switch should glow yellow and no other lights should be on.

Step 2. Turn on the network analyzer.

- The line switch should glow green.
- The fans should be audible.
- The display should flash and then show the hardware boot-up sequence. This process checks the RAM and communication with the hard disk drive. These checks return an error message if a problem is detected.
- The Windows 2000 operating system should start.
- The network analyzer measurement interface should open with an S_{11} measurement displayed.

Step 3. If the analyzer powers up correctly, continue troubleshooting with "Front Panel Troubleshooting" on page 4-16.

Step 4. If the analyzer does not power up correctly, follow these troubleshooting steps:

- If the line switch does not glow or the fans are not operating (audible), go to "Power Supply Check" on page 4-7.
- If you cannot hear the fans operating, go to "If the Fans Are Not Operating" on page 4-11.
- If the line switch glows green and the fans are operating (audible), but the display remains dark, go to "Troubleshooting LCD Display Problems" on page 4-12.
- If the instrument appears to abort the network analyzer measurement interface process, contact Agilent. Refer to "Contacting Agilent" on page 2-11.

Power Supply Check

NOTE There are no fuses to replace within the power supply. If you determine that the power supply is the failed assembly, replace the power supply.

A catastrophic failure in the power supply can be determined by observing the line switch, and by measuring the probe power at the front-panel Probe Power connectors:

1. Ensure that the instrument is plugged in with the power switch in the standby position (power not switched on). Verify that the line switch glows yellow. A line switch that glows yellow indicates that the +15 VDC line (P15 STB) is providing enough voltage to light the LED. (The actual voltage may not be +15 VDC.)
2. Turn on the instrument power and verify that the line switch glows yellow. When the line switch glows, it is an indication that the power supply has received an “ON” command and that the +5.2 VDC supply can supply enough current to light, at least, these lamps.
3. The front-panel probe power-connector can be used to check the +15 VDC and –12.5 VDC (–15 VDC) supplies. The –12.5 VDC is produced by post regulating the –15 VDC supply. Refer to Figure 4-2 for a diagram of the probe power connector.

Figure 4-2 Probe Power Connector

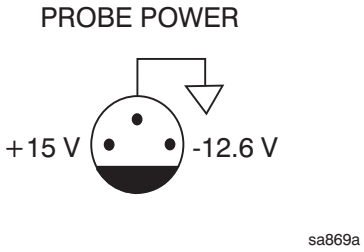

If all of these supply voltages are missing, it is likely that the problem is either a defective A4 power supply, or another assembly is loading down the A4 power supply. Continue with “If All Supply Voltages Are Missing” on page 4-9, to determine the cause of the problem.

If the line switch is lit correctly, and the probe power voltages are as listed in Table 4-1 on page 4-9, the power supply has not suffered a catastrophic failure; however, the power supply could still be at fault. Continue with the next section to measure the individual voltage supplies.

Measure the Individual Voltage Supplies

WARNING **The instrument contains potentially hazardous voltages. Refer to the safety symbols provided on the instrument and in "General Safety Considerations" on page 1-3 before operating the unit with the cover removed. Make sure that the safety instructions are strictly followed. Failure to do so can result in personal injury or loss of life.**

To measure the power supply voltages, it is necessary to remove the instrument's outer and inner covers. Refer to "Removing the Covers" on page 7-6 for removal procedures. Use the E8356-60021 extender board to measure the individual power supply voltages. Insert the extender board into an empty slot next to the A6 signal processing ADC module (SPAM) board.

NOTE If any one individual voltage supply from the A4 power supply develops an over-voltage or over-current problem, all supplies are affected. The supply goes into a "burp" mode characterized by the supplies cycling on and off at a low voltage level. The cause of the over-voltage or over-current condition can be the A4 power supply itself, or any assembly to which the A4 power supply provides voltage. To isolate the cause of "burp" mode, continue to the assembly removal process as described in the section titled "If All Supply Voltages Are Missing" on page 4-9.

On the extender board, measure the power supply voltages using a digital multi-meter. Refer to Figure 4-3 for the power supply test points on the extender board. Use the point marked "GND" for the ground connection. Refer to Table 4-1 on page 4-9 for the correct voltages.

Figure 4-3 E8356-60021 Synthesizer/Reference Extender Measurement Points

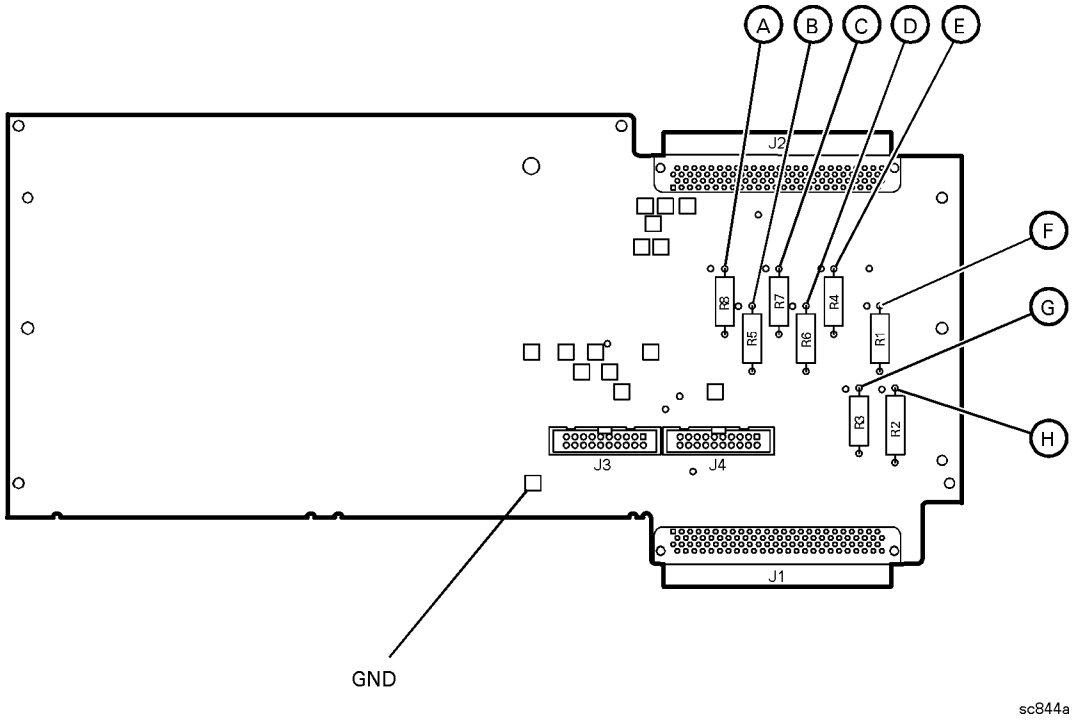

Table 4-1 Extender Board Measurement Points

Measurement Location	Signal Description	Test Equipment Used[a]	Expected Level (Vdc)	Approximate Resistance (Ω)
A	+5V power supply	DMM	+5.0	285
B	-15V power supply	DMM	-15.0	12.7 k
C	-5V power supply	DMM	-5.0	7.2 k
D	+9V power supply	DMM	+9.0	4.0 k
E	+15V power supply	DMM	+15.0	3.0 k
F	+15V power supply	DMM	+15.0	2.8 k
G	+22V power supply	DMM	+22.0	890
H	+32V power supply	DMM	+32.0	2.6 k

a. DMM = Digital multi-meter

If All Supply Voltages are Present

If all of the supplies have measured within tolerances, and the instrument still is not functioning properly, refer to "Rear Panel Troubleshooting" on page 4-20.

If All Supply Voltages Are Missing

WARNING **Disconnect the line-power cord before removing any assembly. Procedures described in this document may be performed with power supplied to the product while protective covers are removed. Energy available at many points may, if contacted, result in personal injury or loss of life.**

You must sequentially remove all of the assemblies, taking care to disconnect the line power cord before each removal, and then measure the supply voltages after each removal.

If the missing supply voltages return to a "power on" condition after removal of an assembly, suspect that assembly as being defective.

Remove the network analyzer assemblies in the order specified in the following steps (refer to Chapter 7 for removal instructions).

1. Unplug the test set motherboard cable from the A16 test set motherboard (refer to "Removing and Replacing the A16 Test Set Motherboard and the USB Hub" on page 7-26).
2. Unplug the front panel interface cable from the A3 front panel interface board (refer to "Removing the A3 Front Panel Interface Board" on page 7-10).
3. Remove the A5 SPAM board (refer to "Removing and Replacing the A5 through A10 Boards" on page 7-16).
4. Remove the A6 multiplier board (refer to "Removing and Replacing the A5 through A10 Boards" on page 7-16).

5. Remove the A7 fractional-N synthesizer board (refer to "Removing and Replacing the A5 through A10 Boards" on page 7-16).
6. Remove the A8 multiplier board (refer to "Removing and Replacing the A5 through A10 Boards" on page 7-16).
7. Remove the A9 fractional-N synthesizer board (refer to "Removing and Replacing the A5 through A10 Boards" on page 7-16)
8. Remove the A10 frequency reference board (refer to "Removing and Replacing the A5 through A10 Boards" on page 7-16).
9. Unplug the A40 floppy disk drive from the A14 system motherboard (refer to "Removing and Replacing the A40 Floppy Disk Drive" on page 7-44).
10. Unplug the A41 hard disk drive from the A15 CPU board (refer to "Removing and Replacing the A41 Hard Disk Drive" on page 7-46).

The minimum required assemblies to power up the analyzer are:

- A4 power supply
- A14 system motherboard
- A15 CPU board

To further isolate the failure in the three remaining assemblies, measure the resistance on the extender board (with the power turned off) from the power supply test points to "GND". Refer to Figure 4-3 on page 4-8 for the location of the measurement points. The resistances should be as shown in Table 4-1 on page 4-9.

NOTE Make sure that the only assemblies plugged in are the three minimum required assemblies listed above.

Check for shorts (zero Ω) or very low resistance (approximately 1 Ω). If a short or low resistance is measured, isolate each of the remaining three boards in the following order, and recheck the shorted test point after each board is removed. Note that the resistance may be different from that listed in the table, but you should be able to determine if the shorted condition has changed.

Isolate the remaining three assemblies:

- remove the A15 CPU board
- remove the A4 power supply
- This leaves only the A14 system motherboard installed. If the measurements are still incorrect, this is the suspected faulty assembly.

If the Fans Are Not Operating

CAUTION The power supply may be in thermal shutdown if the instrument has been operating without the fans running. Allow the instrument to cool down before troubleshooting.

If all three fans are not operating, suspect a power supply problem or a defective A14 system motherboard. Refer to "Power Supply Check" on page 4-7 to check the individual supplies. If the supplies are within specifications, the most probable cause is a defective A14 system motherboard. Refer to "Removing and Replacing the A14 System Motherboard" on page 7-22.

If only one or two fans are not functioning, and the power supplies are within specifications, suspect the A14 system motherboard or a defective fan. Perform the following procedure.

1. Remove the front panel assembly from the instrument. Refer to "Removing and Replacing the Front Panel Assembly" on page 7-8.
2. Refer to Figure 4-4. Measure the fan voltages at J1, J3, and J4 on the A14 system motherboard.

Figure 4-4 Fan Voltages

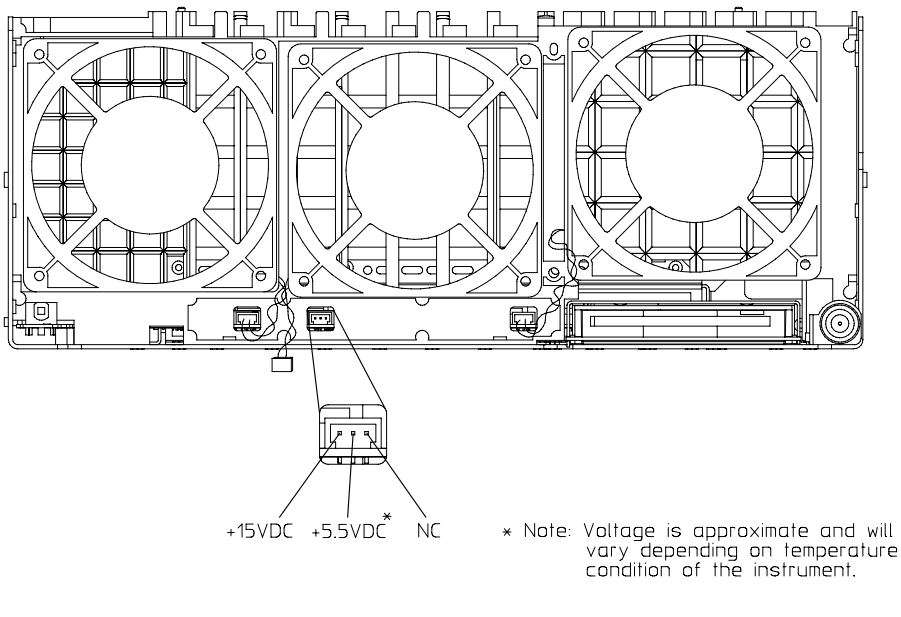

3. If the correct voltage is present and the fan connector is in good mechanical condition, suspect a defective fan. Refer to "Removing and Replacing the Midweb and the B1 Fan" on page 7-53.

If the voltage is not present, suspect a defective A14 system motherboard. Refer to "Removing and Replacing the A14 System Motherboard" on page 7-22.

Troubleshooting LCD Display Problems

This procedure is intended to isolate the faulty assembly when the display is dark. If the display is lit, but the color mix is faulty, refer to "A2 Display Test" on page 4-18.

NOTE There are no front panel adjustments for intensity and contrast of the LCD.

1. If the display is dim, the backlight assembly is defective. Refer to "Removing and Replacing the Front Panel Assembly" on page 7-8.

If the display is dark (not visible), connect an external VGA monitor to the rear panel VGA output connector on the instrument. Be aware that some multisync monitors might not be able to lock to a 60 Hz sync pulse. If the video information is not present on the external VGA monitor, the most probable cause is the A15 CPU board. Refer to "Removing and Replacing the A15 CPU Board" on page 7-24.

2. If the external VGA monitor is functioning, verify that the front panel interface ribbon cable is properly plugged into the motherboard connector.
3. If the front panel interface ribbon cable is properly connected, suspect that one or more of the following is defective:
   - inverter board (mounted on the display assembly)
   - display lamp assembly
   - A3 front panel interface board
   - A2 display assembly

Refer to the following paragraphs to determine which of the above listed assemblies is defective.

Creating the Test Setup

For easy access to measure the voltages on the inverter board and on the A3 front panel interface board, it is best to disassemble the front panel and remove these two boards to set in front of you for testing. Use the ribbon cables that come with the boards and the analyzer as the supply source. Follow this procedure:

1. Turn off the analyzer.
2. Remove the front panel. Refer to "Removing and Replacing the Front Panel Assembly" on page 7-8.
3. After the front panel is removed from the analyzer, isolate the inverter board by first removing the display assembly. Refer to "Removing the A2 Display Assembly" on page 7-10. Put the A2 display assembly and its ribbon cables aside.
4. Remove the A3 board by referring to "Removing the A3 Front Panel Interface Board" on page 7-10. Put the A3 board aside.
5. Duplicate the board connections on your ESD safe test desk top by laying the A2 and A3 in front of the open-faced analyzer. Lay the A2 and A3 boards component-side down, the A2 to the left of the A3, with the top of the boards towards you.

6. Connect the display ribbon cable and display lamp cable from A2 to A3. Connect the front panel interface ribbon cable coming from the analyzer to the A3 board.
7. Turn the analyzer on and refer to "Verifying the Inverter Board" on page 4-13 and "Verifying the A3 Front Panel Interface Board" on page 4-15 to test and troubleshoot the boards.

Verifying the Inverter Board

WARNING **High voltage is present on the inverter board and the A3 front panel interface board. Be careful when measuring signals and voltages on these boards.**

NOTE To access the front panel boards for measurements, it is necessary to remove the front panel assembly. Refer to "Removing and Replacing the Front Panel Assembly" on page 7-8.

Using Figure 4-5 as a reference, measure the signals and voltages indicated in Table 4-2 on page 4-13. If the signals and voltages measure good, the inverter board is functioning correctly.

Figure 4-5 Inverter Board Test Point Locations

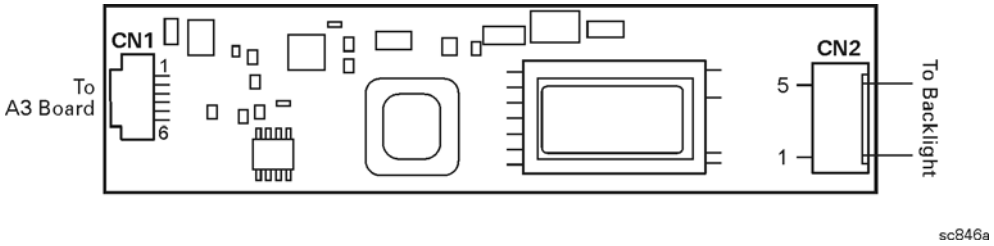

Table 4-2 Inverter Board, Voltages and Signals

Test Point	Signal or Voltage	Test Point	Signal or Voltage
CN1 pin 1	+5.1 Vdc	CN1 pin 5	0 V (ground)
CN1 pin 2	+5.1 Vdc	CN1 pin 6	+2.54 V
CN1 pin 3	39 mV	CN2 pin 1	+400 V peak sinewave @ 38 kHz
CN1 pin 4	0 V (ground)	CN2 pin 5	ac neutral (referenced to pin 1)

After measuring the points CN1 and CN2, match the results and perform the rework as indicated in the action column in Table 4-3.

Table 4-3 Inverter Board Troubleshooting Steps

Input (CN1)	Output (CN2)	Action
Good	Good	Replace the display lamp. Refer to "Removing and Replacing the Display Inverter Board and the Display Lamp" on page 7-12.
Good	**Bad**	Replace the inverter. Refer to "Removing and Replacing the Display Inverter Board and the Display Lamp" on page 7-12.
Bad	**Bad**	Refer to "Verifying the A3 Front Panel Interface Board" on page 4-15.

Verifying the A3 Front Panel Interface Board

To verify that the HSYNC (horizontal sync), VSYNC (vertical sync), and LCD clock are functioning correctly, measure the signals listed in Table 4-4 and illustrated in Figure 4-6 on page 4-15. If all of these signals measure correctly, suspect a defective backlight or LCD. The backlight is the most probable cause.

CAUTION Be careful not to short connector pins together when measuring these signals.

Table 4-4 A3 Front Panel Interface Board, Voltages and Signals

Signal Type	Test Point	Voltage	Signal
HSYNC	J2 pin 3	0 to +3 V	30.8 kHz square wave
VSYNC	J2 pin 4	0 to +3 V	60 Hz square wave
CLOCK	J2 pin 27	0 to +3.4 V pk-to-pk	25 MHz sine wave

Figure 4-6 Verifying HSYNC, VSYNC, and LCD Clock

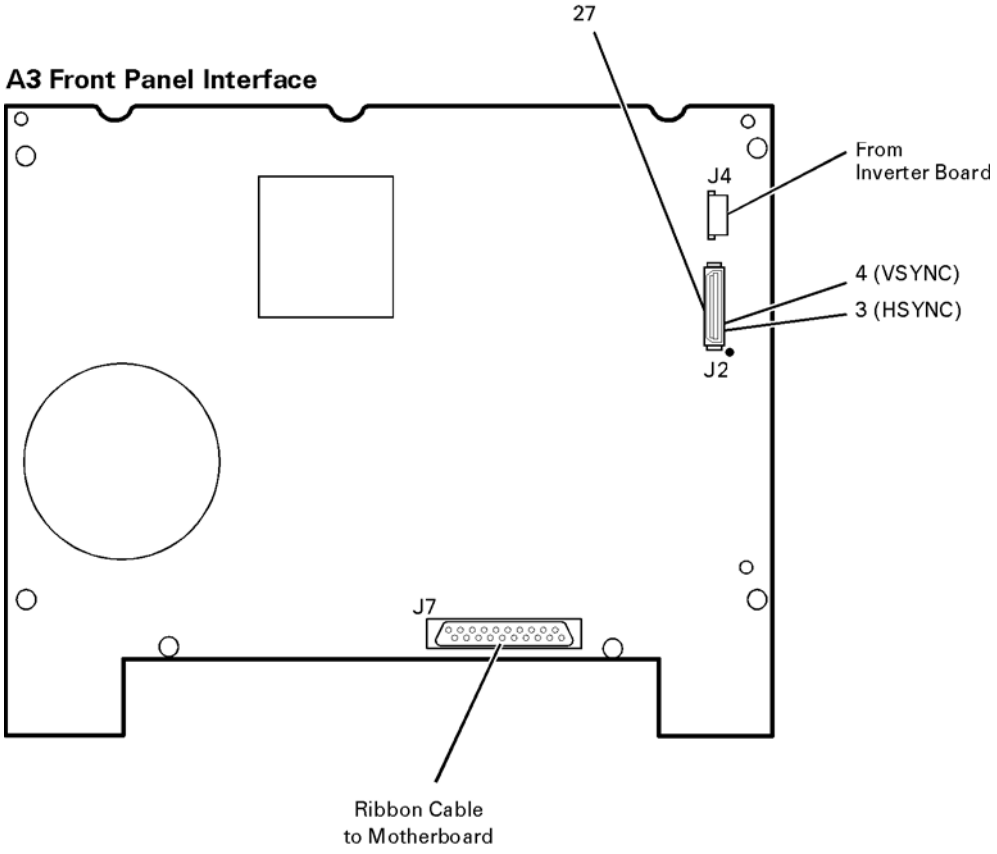

If any of the three signal types is incorrect, replace the A3 front panel interface board. Refer to "Removing the A3 Front Panel Interface Board" on page 7-10.

If all of the signal types are correct, replace the A2 display assembly. Refer to "Removing the A2 Display Assembly" on page 7-10.

Front Panel Troubleshooting

The front panel assembly consists of the A1 keypad, A2 display, and the A3 front panel interface. The following tests verify the operation of the front panel assembly when the analyzer is in the measurement mode. If the instrument fails to power up correctly, or it is difficult to verify due to a faulty display, refer to "Power Up Troubleshooting" on page 4-6.

Refer to the following sections to verify the operation of the noted assemblies.

- "A1 Front Panel Keypad and RPG Test" below
- "A2 Display Test" on page 4-18
- "A3 Front Panel Interface Board" on page 4-19
  - — USB
  - — Speaker
  - — Probe Power

If all assemblies are working correctly, continue troubleshooting with "Rear Panel Troubleshooting" on page 4-20.

A1 Front Panel Keypad and RPG Test

Test the front panel keypad by running the front panel test. To run the front panel test, perform the following:

On the **System** menu, point to **Service** and click **Front Panel Test.**

A **Front Panel Service Test** dialog box will be displayed, as shown in Figure 4-7.

Figure 4-7 Front Panel Service Test Dialog Box

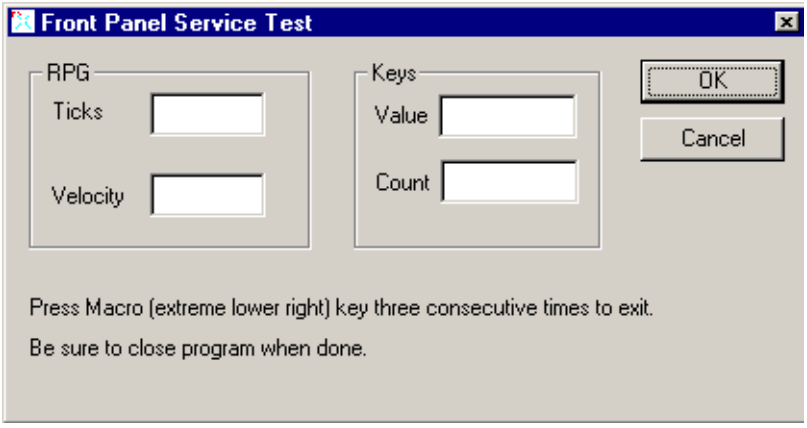

Checking the Front Panel Keys

To check the front panel keys, push each key and compare the decimal value in the Value box under Keys to the key values in Table 4-5.

- If all the key values are correct, then the A1 front panel keypad is working. If some of the keys are not working, suspect a faulty A1 keypad. To replace the A1 keypad, refer to "Removing the A1 Keypad Assembly" on page 7-10.
- If none of the keys are working correctly, suspect a faulty A3 front panel interface board. To replace the A3 front panel interface board, refer to "Removing the A3 Front Panel Interface Board" on page 7-10.

Table 4-5 Keyboard Key Numbers

Key Value	Front Panel Key	Key Value	Front Panel Key	Key Value	Front Panel Key	Key Value	Front Panel Key
50	Tab ←	66	Measure Setups	82	7	98	1
51	Up ↑	67	F2	83	8	99	2
52	Tab →	68	F3	84	6	100	+/– ⇐
53	Window	69	F4	85	M/u	101	Not Applicable
54	OK	70	Help	86	Cancel	102	Not Applicable
55	Start/ Center	71	Trigger	87	Marker	103	Save
56	Stop/ Span	72	Average	88	Marker Table	104	Maximum Window Icon
57	Power	73	Calibrate	89	Limit Table	105	Preset
58	Down ↓	74	F1	90	4	106	0
59	Click	75	Not Applicable	91	5	107	.
60	Trace	76	9	92	3	108	Not Applicable
61	Display Configure Icon	77	G/n	93	Enter	109	Not Applicable
62	Not Applicable	78	Menu Dialog	94	Not Applicable	110	Not Applicable
63	Sweep Setup	79	Measure	95	Marker Search	111	Recall
64	Channel	80	Format	96	Marker Function	112	Print Icon
65	Sweep Type	81	Scale	97	Math/ Memory	113	Macro

Checking the RPG (Front Panel Knob)

To check the RPG knob, rotate the knob and check for a fluid movement of numbers in the **Velocity** box.

- If the movement of numbers in the **Velocity** box is not smooth or no numbers appear at all, suspect a faulty A3 front panel interface board. To replace the A3 front panel interface board, refer to "Removing the A3 Front Panel Interface Board" on page 7-10.

A2 Display Test

The display should be bright with all annotations and text readable. The display test allows you to check for non-functioning pixels and other problems.

NOTE If the display is dim or dark, refer to "Troubleshooting LCD Display Problems" on page 4-12.

What Is a Damaged Pixel?

A pixel is a picture element that combines to create the image on the display. They are about the size of a small pin point. Damaged pixels can be either "stuck on" or "dark."

- A "stuck on" pixel is red, green, or blue and is always displayed regardless of the display setting. It will be visible on a dark background.
- A "dark" pixel is always dark and will be displayed against a background of its own color.

How to Run the Display Test

To run the display test, perform the following:

On the **System** menu, point to **Service**, and then click **Display Test**.

A multi-color screen is displayed. Be prepared to look for the symptoms described in "How to Identify a Faulty Display," and then click the **Start Test** button. To continue to the next test, click the moving **Next Test** button. The button moves to allow you to see all of the display. After the test is completed, the display defaults to the network analyzer screen.

How to Identify a Faulty Display

One or more of the following symptoms indicate a faulty A2 display assembly:

- a complete row or column of "stuck on" or "dark" pixels
- more than six "stuck on" pixels (but not more than three green)
- more than twelve "dark" pixels (but not more than seven of the same color)
- two or more consecutive "stuck on" pixels or three or more consecutive "dark" pixels (but no more than one set of two consecutive dark pixels)
- "stuck on" or "dark" pixels less than 6.5 mm apart (excluding consecutive pixels)

If any of these symptoms occur, replace the A2 display assembly. Refer to "Removing the A2 Display Assembly" on page 7-10.

A3 Front Panel Interface Board

This assembly performs the following functions:

- It routes USB signals between the front-panel USB connector and the A15 CPU board.
- The speaker produces the audio output from signals supplied by the A15 CPU board.
- It supplies power to the two front-panel probe power connectors.
- It routes key pad commands from the A1 keypad to the A15 CPU board.
- It routes display signals from the A15 CPU board to the A2 display assembly.

Checking the USB Port

To verify proper operation of the USB port:

- Connect a known good USB device, such as a USB mouse.
- Wait 15 seconds for the analyzer to verify the device connection, and then check the operation of the USB device.
- If the device performs correctly, the USB port is functioning properly.
- If the device does not perform correctly, the USB port is faulty. Refer to "Removing the A3 Front Panel Interface Board" on page 7-10.

Checking the Speaker

If no audio is heard:

- Verify that the volume is set correctly and the proper sound driver is loaded; do the following:
  - On the **System** menu, point to **Configure,** and then click **Control Panel**.
  - Click the **Sounds and Multimedia** icon. Follow the normal Windows procedure to check the sound drivers and volume. If the audio is still not heard, suspect a faulty speaker. Refer to "Removing the A3 Front Panel Interface Board" on page 7-10.

Checking the Probe Power Connectors

To verify the probe power operation, refer to "Power Supply Check" on page 4-7.

Checking the Operation of the Key Pad Commands

To verify the key pad functionality, refer to "A1 Front Panel Keypad and RPG Test" on page 4-16.

Checking the Display

To verify the display functionality, refer to "A2 Display Test" on page 4-18.

Rear Panel Troubleshooting

Each rear panel connector is associated with a hardware group in the analyzer. You can use the data at these rear panel connectors to help troubleshoot these hardware groups in addition to testing the connectors.

The connectors discussed in this section are:

- USB
- SERIAL (RS-232)
- PARALLEL (1284-C)
- VGA
- GPIB
- LAN

Checking the USB Ports

NOTE The rear panel contains five USB ports; one “stand-alone USB port” on the CPU board and a “group-of-four” connected to a separate hub.

To verify proper operation of any USB port:

- Connect a known good USB device, such as a USB mouse.
- Wait 15 seconds for the analyzer to verify the device connection, and then check the operation of the USB device.
- If the device performs correctly, the USB port is functioning properly.
- If the device does not perform correctly, remove the non-working USB device, wait 15 seconds, and then reconnect the device to the USB port.
- If the device still does not perform correctly, remove the USB device and connect it to the front panel USB.

NOTE If the front panel USB port does not work, refer to “A3 Front Panel Interface Board” on page 4-19.

- If the USB device has been verified to work on the front panel but *not* on the stand-alone USB port:
  — Then the A15 CPU board is faulty. Refer to “Removing and Replacing the A15 CPU Board” on page 7-24.
- If the USB device has been verified to work on the front panel but not on one of the “group-of-four” USB ports:
  — Then the rear panel hub is faulty. Refer to “Removing and Replacing the A16 Test Set Motherboard and the USB Hub” on page 7-26 for replacing the rear panel hub board.

Checking the SERIAL (RS-232), PARALLEL (1284-C), or VGA Port

To verify the proper operation of the SERIAL, PARALLEL, or VGA port:

- Connect a known good serial, parallel, or VGA peripheral device.
- Wait 15 seconds for the analyzer to verify the device connection, and then check the operation of the peripheral device.
- If the peripheral device performs correctly, the port is functioning properly.
- If the peripheral device does not function properly, the A15 CPU board is faulty. Refer to "Removing and Replacing the A15 CPU Board" on page 7-24.

Checking the GPIB Port

The network analyzer uses a National Instruments 488.2 GPIB controller and associated driver software. This software includes a test utility that scans the GPIB bus and returns the status of all the connected peripherals.

To run the test utility software and check the GPIB status:

1. Connect a known good peripheral to the analyzer using a known good GPIB cable.
2. On the **System** menu, point to **Configure,** and then click **SCPI/GPIB**. A **SCPI/GPIB** dialog box is displayed.
3. In the **GPIB** block, click **System Controller** to establish the analyzer as a controller. Wait for the analyzer to configure, and then click **OK**.
4. On the **System** menu, click **Windows Taskbar** to open the **Start Menu** window.
5. On the **Start Menu** window, point to **Programs, National Instruments NI-488.2,** and then click **Explore GPIB** to open the **Measurement & Automation** window.
6. On the left side of the **Measurement & Automation** window under folders:
   a. Click the plus sign to expand the **Measurement & Automation** folder.
   b. Click the plus sign to expand the **Devices and Interfaces** folder.
   c. Right click **GPIB0 (AT-GPIB/TNT)** to open a submenu.
7. On the submenu, click **Scan for Instruments** to run the test.
8. The state of all the peripherals found on the bus is returned.
9. If problems are detected, check the connections of all GPIB cables, and check all the GPIB addresses of the instruments on the bus.

NOTE Address Information

- Each device must have its own unique address.
- The network analyzer's default GPIB address in the controller mode is 21.
- The address set on each device must match the one recognized by the analyzer (and displayed).

Refer to the manual of the peripheral to read or change its address.

Troubleshooting Systems with Controllers

Passing the preceding test indicates that the analyzer's peripheral functions are operating normally. Therefore, if the analyzer has not been operating properly with an external controller, check the following:

- The GPIB interface hardware is incorrectly installed or not operational. (Refer to the embedded help in your analyzer.)
- The programming syntax is incorrect. (Refer to the embedded help in your analyzer.)

LAN Troubleshooting

Problems with the Local Area Network (LAN) can be difficult to solve. Software and protocol problems can make it difficult to determine whether the analyzer's hardware is working properly, or if there is a problem with the LAN or cabling.

The purpose of this section is to determine if the analyzer's hardware is functioning properly. While the turn-on self-test verifies some LAN hardware functionality, it is limited to internal testing only. Incorrect IP addresses will prevent proper operation. Improper subnet masks may allow only one-way communication, while improper gateway addresses may exclude outside LAN access.

Ping Command

The analyzer has the built-in capability of performing a “ping” operation. Ping will request the analyzer to send a few bytes of information to a specific LAN device. That device will then signal the analyzer that it has received the information. The analyzer computes the approximate round trip time of the communication cycle and displays it. For a full test of two-way communications, a ping test should be performed in two directions.

- **First**: you should ping from the analyzer to the local area network.
- **Second**: you should ping from the local area network to the analyzer.

NOTE In the second case, any other network device capable of sending a ping command could be used, assuming it is connected to the same network. This could be a computer or even another analyzer.

How to Ping from the Analyzer to the Local Area Network (LAN)

Follow the steps below to verify proper LAN operation (assuming you have a functioning LAN). If no network LAN is available, see “Testing Between Two Analyzers” on page 4-24.

1. Make sure the IP address on the analyzer is set properly and that it is unique. If unsure how to check the IP address, refer to the embedded help in the analyzer.
2. Make sure the subnet mask is `0.0.0.0`. If not, note the current setting (to allow setting it back later) and then set it to `0.0.0.0`.
3. Find and note the IP address of another working LAN device on the same network. Make sure this device is turned on, connected, and is functioning properly.
4. To ping the network device:
   a. On the **System** menu, click **Windows Taskbar**.
   b. On the **Windows Taskbar** menu, point to **Programs**, **Accessories,** and then click **Command Prompt.**

c. The command prompt window is displayed.

d. At the prompt, type `ping xxx.xxx.xxx.xxx`[1] and press **Enter** on the front panel or keyboard. Refer to Step 5 for the results of a successful ping.

5. The analyzer attempts four cycles of communications with the indicated LAN device.
   - It displays the time it took to complete each cycle.
   - Each cycle times-out after one second if no communication is established and the message, `Request timed out`, is displayed.
   - It is common for the first of the four cycles to time-out even though subsequent cycles pass.
   - See below for an example output of a successful ping.

```
C:>ping 141.121.69.162

Pinging 141.121.69.162 with 32 bytes of data:

Reply from 141.121.69.162: bytes=32 time<10ms TTL=127
Reply from 141.121.69.162: bytes=32 time<10ms TTL=127
Reply from 141.121.69.162: bytes=32 time<10ms TTL=127
Reply from 141.121.69.162: bytes=32 time<10ms TTL=127

Ping statistics for 141.121.69.162:

    Packets: Sent = 4, Received = 4, lost = 0 <0% loss>.

Approximate round trip times in milli-seconds:

    Minimum = 0ms, Maximum = 0ms, Average = 0ms
```

6. The above message verifies that one way communication from the analyzer to the network has been established
7. If the subnet mask was changed in step 2, set it back at this time.

How to Ping from the Local Area Network (LAN) to the Analyzer

Reverse communication should also be verified. Determining this, though, is dependent upon your network setup and software. Generally, you need to issue a ping command using the IP address of the analyzer to be tested. For example, using Windows 95, 98, 2000 and while at a DOS prompt, type in `ping xxx.xxx.xxx.xxx`[2]. Then press **Enter** on the front panel or keyboard. If full communication can be established, then the computer display shows the cycle time for each of four cycle attempts (similar to that in step 5). Other software may behave somewhat differently, but basically the same.

If the analyzer can talk to the network, but the network can not talk to the analyzer, then the computer or device used from the network may have a subnet mask that excludes communication with the IP address chosen for the analyzer. Any subnet mask other than `0.0.0.0` will exclude operation from some addresses. Changing the subnet mask of a computer or other device should only be attempted by a qualified network administrator. Failure to communicate due to a subnet mask incompatibility does not indicate any failure of the analyzer.

1. The letters x represent the IP address of the other device on the network.
2. The letters x represent the IP address of the analyzer.

If the analyzer fails to ping in either direction, and assuming the subnet masks are set properly, then the fault must be isolated to the analyzer or to the network. Contact a qualified network administrator.

Testing Between Two Analyzers

The ability of the analyzer's LAN to function can be easily tested by connecting two analyzers together using a “crossover cable” (a short length of cable with an RJ-45 connector on each end).

Some network hubs have the capability to make a crossover connection using two normal, or straight-through, cables. If this capability is not available and a crossover cable is not available, a crossover cable can be made by following the directions in “Constructing a Crossover Cable” on page 4-24.

Set the IP addresses on two analyzers. The addresses can be set to anything, but they must be different. Make sure the subnet mask and gateway addresses are set to `0.0.0.0` and that the LAN is active on both analyzers. Connect the two analyzers together using either a crossover cable or a crossover hub.

Now follow the steps in “How to Ping from the Analyzer to the Local Area Network (LAN)” on page 4-22 to have the first analyzer ping the second analyzer. When done, repeat the procedure having the second analyzer ping the first. If both procedures function properly, the LAN circuitry on both analyzers is verified.

If neither function properly:

- One or both IP addresses could be wrong.
- One or both LAN states could be set to off.
- The crossover cable could be miswired.
- One or both analyzers could be defective.

If possible, eliminate the possibility of a defective analyzer by substitution of a known working unit. Once the analyzer has been proven to be working properly, concentration can be placed on the network itself to determine the cause of the failure.

Constructing a Crossover Cable

A crossover cable can be made from a standard LAN cable by connecting pin 1 from each connector to pin 3 of the other connector, and pin 2 from each connector to pin 6 of the other connector.

1. Strip away a few inches of the outside jacket insulation from the middle of a standard LAN cable that has an RJ-45 connector on each end.

NOTE Pins 1, 2, 3, and 6 of the connectors must be located to determine which wires to cut in the following steps. Most, but not all, LAN cables use the color coding listed in Table 4-6. If your cable does not use this color scheme, you will have to determine the locations of the appropriate wires before proceeding with this procedure.

Table 4-6 LAN Pin Definitions and Wire Color Codes

Pin Number	Color	Pin Number	Color
1 (transmit +)	White/orange	5	White/blue
2 (transmit –)	Orange	6 (receive –)	Green
3 (receive +)	White/green	7	White/brown
4	Blue	8	Brown

2. Cut the wires going to pins 1, 2, 3, and 6. Strip away a small amount of insulation from each of the eight cut ends.
   a. Connect the wire from pin 1 on one end of the cable to the wire from pin 3 on the other end of the cable.
   b. Connect the wire from pin 3 on one end of the cable to the wire from pin 1 on the other end of the cable.
   c. Connect the wire from pin 2 on one end of the cable to the wire from pin 6 on the other end of the cable.
   d. Connect the wire from pin 6 on one end of the cable to the wire from pin 2 on the other end of the cable.
3. Insulate all exposed wires so that they cannot short together.
4. Label this as a crossover cable so that it cannot be confused with a standard cable.

Figure 4-8 Construction of a Crossover Cable

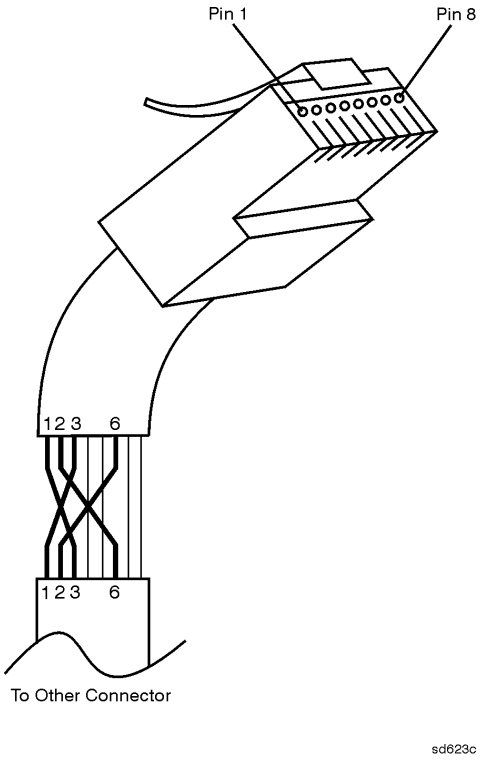

Measurement System Troubleshooting

This section provides troubleshooting procedures for the measurement portion of the PNA. In this section, the analyzer is used as a tool to help isolate the suspected faulty functional group. Once the faulty functional group is determined, troubleshooting steps are provided to help you isolate the faulty assembly or part.

Before you begin—consider: Where do you see a problem?

If you are seeing a problem at **Preset**, perform the standard S-parameter test set troubleshooting procedure, starting with: "Verifying the A, B, C, D, and R Traces (Standard S-Parameter Mode)" on page 4-28.

You should also consider the problem indications that are observed and whether the observed condition is a soft failure or a hard failure.

Soft Failure

With a *soft* failure, the network analyzer's performance has degraded to an unacceptable level, yet it continues to operate and displays no error messages. For this type of failure, performance tests must be conducted to isolate the problem. Begin with viewing the error terms as described in Appendix A, "Error Terms." This will help to isolate most problems. If additional tests are required, refer to "Performance Tests (Agilent N7840A Software Package)" on page 3-28.

Hard Failure

With a *hard* failure, the PNA does not perform well and displays one or more error messages. To diagnose and repair a hard failure:

- Check "Help About" to verify that the model number and options listed match the actual analyzer model and options.
- Check "EEPROM Headers" to verify that the data there is correct.
- Check error messages. Refer to "Error Messages" and follow the suggestions outlined there for each applicable error message.

Help About

Go to the Help About screen by selecting **Help**, **About Network Analyzer** in the network analyzer application. Verify that the information displayed in this screen is correct for your analyzer. If any of the information is incorrect, contact Agilent Technologies. Refer to "Contacting Agilent" on page 2-11.

EEPROM Headers

The network analyzer application uses the firmware revision information stored in the pc board header EEPROM. If the information stored in any EEPROM is incorrect, the network analyzer may not operate properly.

The following table lists the pc boards in your network analyzer that contain EEPROM headers. The pc boards are listed by name and part number and the correct firmware revision code is given for each.

PC Board Name	PC Board Part Number	Memory ID	Hardware ID	Firmware Revision
A5 SPAM	E8364-63187	3	5	A
A6 and A8 multiplier A12 multiplier (Options 146 and 246)	E8364-63182	3	9	A
A7 and A9 fractional-N synthesizer A13 fractional-N synthesizer (Options 146 and 246)	E8364-63189	3	8	C
A10 frequency reference	E8364-60136	3	10	B
A16 test set motherboard	N5230-63078	3	16	D
A17 QABC board	N5230-63085	3	46	A

To view this EEPROM header information on the network analyzer display, select **System**, **Service**, **Utilities**, **View EEPROM Headers** in the network analyzer application.

If the information is incorrect for any of the pc boards, contact Agilent Technologies. Refer to "Contacting Agilent" on page 2-11.

Error Messages

`SOURCE UNLEVELED:` The source ALC circuit on the A16 test set motherboard is running open-loop. Check the cable connections for W31 and W32 between the A19 MASSQuad and the A16 test set motherboard.

`UNLEVELED, SOURCE 1:` (Options 146 and 246) The source ALC circuit on the A16 test set motherboard is running open-loop. Check the cable connections for W31 and W32 between the A19 MASSQuad and the A16 test set motherboard.

`UNLEVELED, SOURCE 2:` (Options 146 and 246) The source 2 ALC circuit on the A17 QABC board is running open-loop. Check the cable connections for W74 and W75 between the A18 MASSQuad and the A17 QABC board.

Verifying the A, B, C, D, and R Traces (Standard S-Parameter Mode)

NOTE There is no way to view the frequency offset receiver response (Option 080). However, some standard S-parameter receiver trace information is helpful in troubleshooting the frequency offset section of the PNA. It is therefore recommended that you run this test even if you *only* suspect the frequency offset section of malfunctioning.

The first step is to verify that the A, B,C, D, and R traces are present and that they are approximately level:

- On the **System** menu, point to **Service**, **Utilities**, and then click **Receiver Display.**
- For all analyzers except those with Options 146 and 246, traces A, B, C, D, and R are displayed in five separate data windows as shown in Figure 4-9. Identifying discrepancies of the traces in these windows can help you to isolate the faulty assembly.

Figure 4-9 Typical Five Channel Display

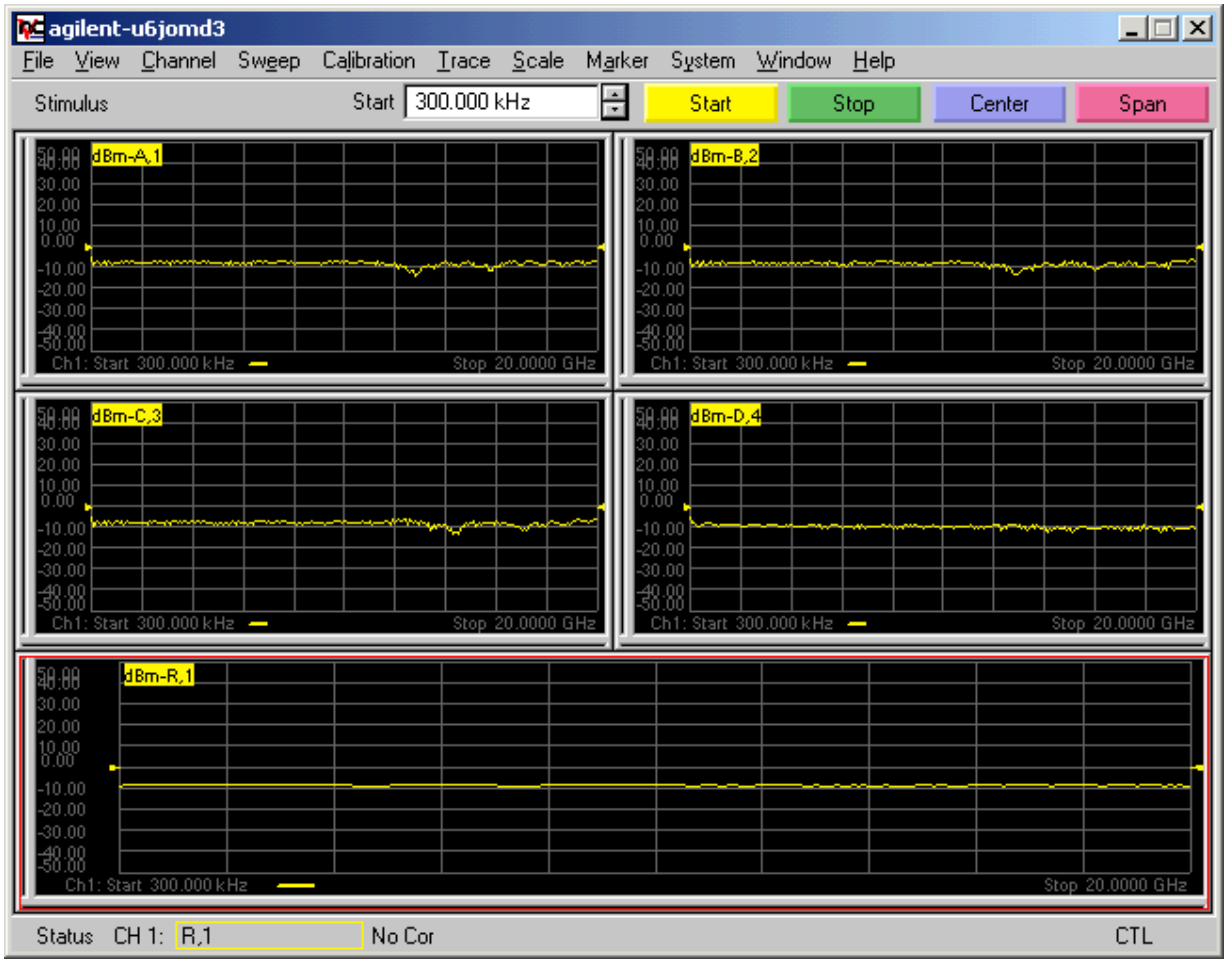

- For analyzers with Options 146 and 246, traces A, B, C, D, R1, and R3 are displayed in six separate data windows as shown in Figure 4-10. Identifying discrepancies of the traces in these windows can help you to isolate the faulty assembly.

Figure 4-10 Typical Six Channel Display for Options 146 and 246

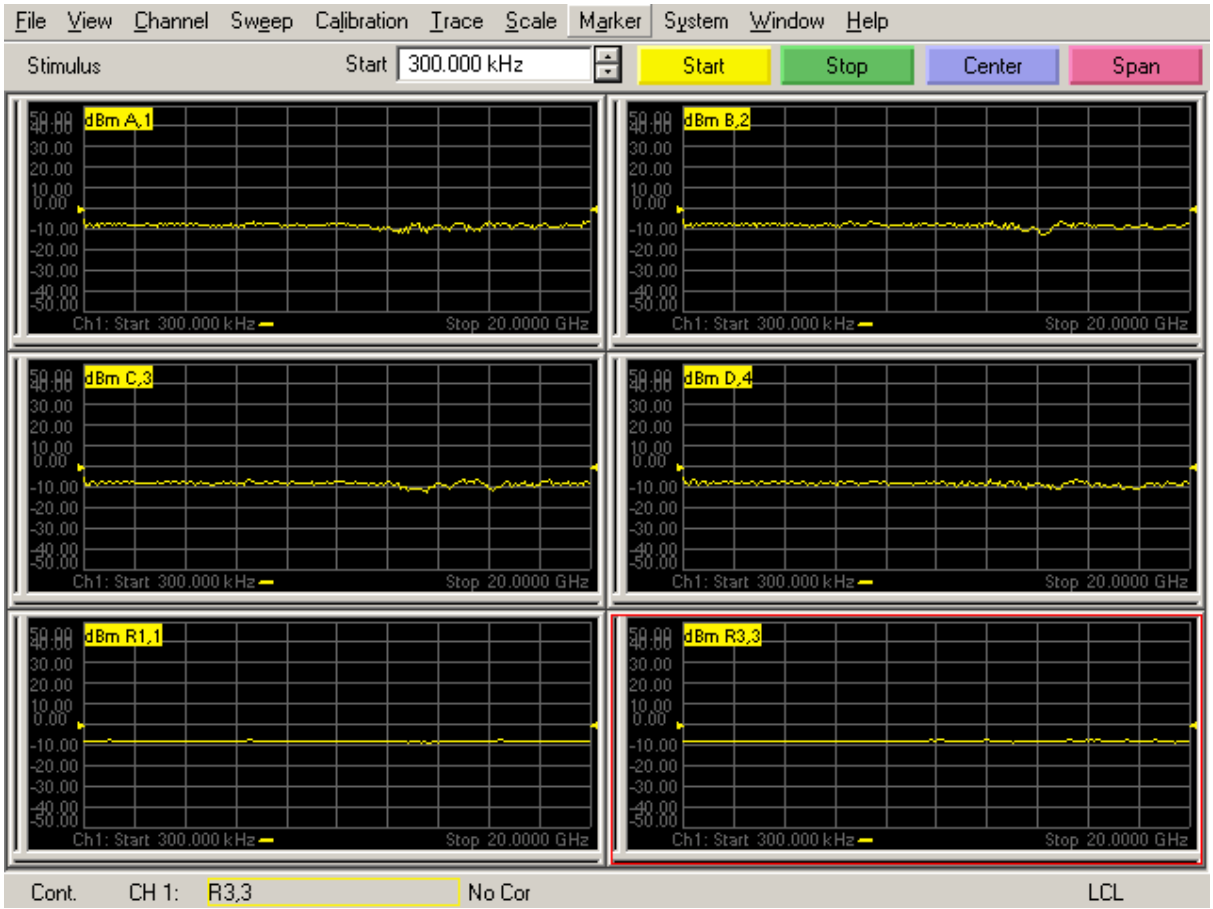

- If all traces are present and are similar to the traces in Figure 4-9 or Figure 4-10, then there are no major problems with the analyzer's measurement system. There may, however, be a minor failure in the analyzer.

  To test further:

  — Go to Chapter 3, "Tests and Adjustments" and perform all the tests in that section.

  — If a problem still exists, contact Agilent. Refer to "Contacting Agilent" on page 2-11.

- If any of the traces are not present, are noisy or distorted, or are at an incorrect level, then there is a problem with the analyzer's measurement system. Proceed to "Where to Begin Troubleshooting."

Where to Begin Troubleshooting

For the purposes of troubleshooting, the analyzer block diagram is divided into the following functional groups:

- **the source group**
  - — A6, A8, and A12 (Options 146 and 246 only) multipliers
  - — A7, A9, and A13 (Options 146 and 246 only) fractional-N synthesizers
  - — A10 frequency reference
  - — A16 test set motherboard
  - — A17 QABC board (Options 146 and 246 only)
  - — A18 MASS 26.5 (MASSQuad) (Options 146 and 246 only)
  - — A19 MASS 26.5 (MASSQuad)
- **the signal separation group**
  - — A18 MASS 26.5 (MASSQuad) (Options 146 and 246 only)
  - — A19 MASS 26.5 (MASSQuad)
  - — A21, A22, A23, and A24 test port couplers
  - — A25 60-dB step attenuator (Options 145, 245, 146, and 246 only)
  - — A26 60-dB step attenuator (Options 146 and 246 only)
  - — Port 1, Port 2, Port 3, Port 4, and A, B, C, D, and R ports
- **the receiver group**
  - — A5 SPAM board
  - — A20 mixer brick
  - — A29 reference channel switch (Options 146 and 246 only)

Use the list on the following pages to help you determine in which analyzer functional group to begin troubleshooting.

This is by no means an exhaustive list of possible symptoms nor possible failures. It is recommended that you view the system block diagram, at the end of this chapter, as you review the entries in this list and perform any of the troubleshooting procedures listed.

Good judgement and established logical troubleshooting techniques must be used to complement the procedures contained in this section.

Refer to Table 4-7 on page 4-40 for a list of the frequencies associated with each of the network analyzer's 13 or 17 bands.

All Traces

- ***If all traces are missing in all bands***, the problem is most likely in the source group. However, a missing or disabled DSP driver may exhibit the same or similar symptoms. To verify that this DSP driver is present and enabled:
  1. Click My Computer, **Properties**, **Hardware** tab, **Device Manager**. Expand **Network Adapters**. The following entry should be listed: **Agilent Technologies DSP Driver #2** and should be enabled.
  2. If the icon to the left of the name is a yellow box containing an exclamation mark (!), use Windows Explorer to verify the presence of the following file: `C:\WINNT\system32\drivers\spampnp.sys`.
  3. If you have verified that the DSP driver is present and enabled, but all traces are still missing in all bands, go to "Checking the Source Group" on page 4-32.
- ***If the trace faults are band-related***, the problem is in the source group. Using Table 4-7 on page 4-40, note the frequency bands in which problems are seen. Go to "Source Group Tests" on page 4-37 and perform the band-specific tests that correspond to the bands in which the problems are seen.

R Trace Only

A problem that affects only the R trace is isolated to the A20 mixer brick or the A5 SPAM board. For analyzers with Options 146 or 246, the problem is additionally isolated to the A29 reference channel switch and accompanying limiter and DC block. Go to "Checking the Receiver Group" on page 4-49.

A Trace Only

If the trace is missing in all bands, go to "Checking the Signal Separation Group" on page 4-45.

B Trace Only

If the trace is missing in all bands, go to "Checking the Signal Separation Group" on page 4-45.

C Trace Only

If the trace is missing in all bands, go to "Checking the Signal Separation Group" on page 4-45.

D Trace Only

If the trace is missing in all bands, go to "Checking the Signal Separation Group" on page 4-45.

A, B, and R1 Traces Only (Options 146 and 246)

The problem is in the source (1) group, go to "Checking the Source Group" on page 4-32. If the trace is missing in all bands, go to "Checking the Signal Separation Group" on page 4-45.

C, D, and R3 Traces Only (Options 146 and 246)

The problem is in the source 2 group, go to "Checking the Source Group" on page 4-32. If the trace is missing in all bands, go to "Checking the Signal Separation Group" on page 4-45.

Checking the Source Group

Serial Bus Test

Before performing tests on specific assemblies in the source group, it is recommended that you perform the serial bus test. This may help to isolate the failure to a specific assembly.

Through the front panel, the serial bus test allows you to check signal and voltage levels at 32 points (nodes) distributed across four of the printed circuit board assemblies in the analyzer. With this test you can isolate problem board assemblies in the analyzer. The board assemblies tested and their associated node numbers are as follows:

NOTE This test is written for a PNA as it was originally shipped from the factory. Due to changes in board production, this test may not show accurate pass/fail results if the A6, A7, A8, A9, A10, or A16 board have been replaced with newer board assemblies.

Board Assembly	Node Numbers
A6 multiplier	1211 to 1218
A8 multiplier	1111 to 1118
A10 frequency reference	211 to 218
A7 fractional-N synthesizer	411 to 418
A16 test set motherboard, MA	511 to 518
A16 test set motherboard, MASS	611 to 618
A16 test set motherboard, AUX 1	711 to 718
A16 test set motherboard, AUX 2	811 to 818
A9 fractional-N synthesizer	911 to 918

Descriptions of each board assembly and node is included in this section. Location of the nodes is indicated with a ♦ symbol on the block diagrams located at the end of this chapter.

Performing the Serial Bus Test

First, this test sequentially checks all 48 nodes at 45 MHz. Next, the test checks all nodes that change values with frequency, at 49 different frequency points. For each node, measured values are copied to an ASCII text file in the service directory on the hard disk drive, `C:\Program Files\Agilent\Network Analyzer\Service\`. Any measured values that exceed the tolerances are highlighted in the application and the data file.

To run the serial bus test:

- On the **System** menu, point to **Service,** and then click **Serial Bus Test**.
- The dialog box in Figure 4-11 on page 4-33 is displayed. Click **Begin** to start the test.

Figure 4-11 Serial Bus Test Dialog Box

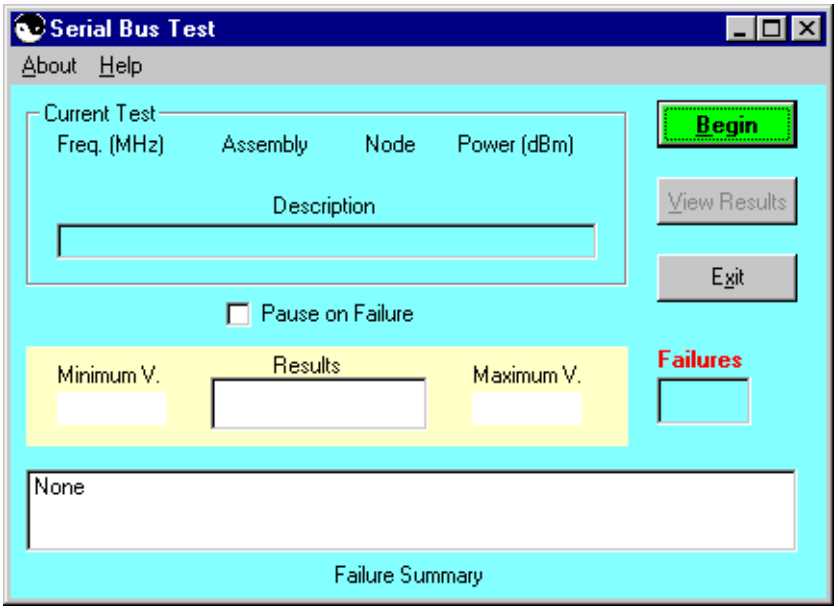

Node Descriptions, A6 Multiplier Board

Node 1211 ***Gnd*** Node 1211 provides a ground reference for measurements.

Node 1213 ***ALC Integrator*** Node 1213 senses the output of the ALC integrator. The output of the ALC integrator is the combined voltage output of all compensation circuits in the ALC. The voltage level varies with frequency and output power.

Node 1214 ***+5 Vdc Supply Voltage*** Node 1214 senses the 5 Vdc supply voltage that serves as a measurement reference.

Node 1215 ***Power DAC*** Node 1215 senses the output voltage of the power DAC. This output is input to the ALC integrator.

Node 1217 ***Multiplier Output Level*** Node 1217 senses the average voltage output level of the multiplier board used to adjust the output level.

Node Descriptions, A8 Multiplier Board

Node 1111 ***Gnd*** Node 1111 provides a ground reference for measurements.

Node 1113 ***ALC Integrator*** Node 1113 senses the output of the ALC integrator. The output of the ALC integrator is the combined voltage output of all compensation circuits in the ALC. The voltage level varies with frequency and output power.

Node 1114 ***+5 Vdc Supply Voltage*** Node 1114 senses the 5 Vdc supply voltage that serves as a measurement reference.

Node 1115 ***Power DAC*** Node 1115 senses the output voltage of the power DAC. This output is input to the ALC integrator.

Node 1117 ***Multiplier Output Level*** Node 1117 senses the average voltage output level of the multiplier board used to adjust the output level.

Node Descriptions, A10 Frequency Reference Board

Node 211 ***100 MHz Tune*** Node 211 senses the tune voltage that phase locks the 100 MHz VCO. The tune voltage is set by referencing the 100 MHz VCO to the internal 10 MHz OCXO or to the 10 MHz EXT REF.

Node 215 ***External Reference Detect*** Node 215 senses a TTL signal that is used to set the reference frequency switch. The node registers a low TTL voltage when the internal 10 MHz OCXO signal is used or a high TTL voltage when the external 10 MHz EXT REF is used.

Node Descriptions, A7 Fractional-N Synthesizer Board

Node 411 ***+5 Vdc Supply Voltage*** Node 411 senses the 5 Vdc supply voltage that serves as a measurement reference.

Node 412 ***1.5 to 3.0 GHz VCO Compensation*** Node 412 senses the average voltage output level of the 1.5 to 3.0 GHz VCO.

Node 413 ***1.5 to 3.0 GHz VCO Tune Voltage*** Node 413 senses the average voltage input level of the 1.5 to 3.0 GHz VCO.

Node 414 ***Heterodyne Band ALC Level*** Node 414 senses the ALC output voltage that is used to level the heterodyne circuit output for band 1.

Node 415 ***2.250 GHz VCO Tune Voltage*** Node 415 senses the average voltage input level of the 2.250 GHz VCO.

Node 416 ***Fundamental and Divide-by-2 Band ALC Level*** Node 416 senses the ALC output voltage that is used to level the heterodyne circuit output for bands 2-25.

Node 417 ***2.250 GHz VCO Compensation*** Node 417 senses the average voltage output level of the 2.250 GHz VCO.

Node 418 ***ALC Level Adjust*** Node 418 senses the voltage that is used to set the offset on the heterodyne band ALC.

Node Descriptions, A9 Fractional-N Synthesizer Board

Node 911 ***+5 Vdc Supply Voltage*** Node 411 senses the 5 Vdc supply voltage that serves as a measurement reference.

Node 912 ***1.5 to 3.0 GHz VCO Compensation*** Node 412 senses the average voltage output level of the 1.5 to 3.0 GHz VCO.

Node 913 ***1.5 to 3.0 GHz VCO Tune Voltage*** Node 413 senses the average voltage input level of the 1.5 to 3.0 GHz VCO.

Node 914 ***Heterodyne Band ALC Level*** Node 414 senses the ALC output voltage that is used to level the heterodyne circuit output for band 1.

Node 915 ***2.250 GHz VCO Tune Voltage*** Node 415 senses the average voltage input level of the 2.250 GHz VCO.

Node 916 ***Fundamental and Divide-by-2 Band ALC Level*** Node 416 senses the ALC output voltage that is used to level the heterodyne circuit output for bands 2-25.

Node 917 ***2.250 GHz VCO Compensation*** Node 417 senses the average voltage output level of the 2.250 GHz VCO.

Node 918 ***ALC Level Adjust*** Node 418 senses the voltage that is used to set the offset on the heterodyne band ALC.

Node Descriptions, A16 Test Set Motherboard, MA

Node 516 ***–15 V Reference*** Node 516 senses the –15 Vdc supply voltage that serves as a measurement reference.

Node 517 ***+9 V Reference*** Node 517 senses the +9 Vdc supply voltage that serves as a measurement reference.

Node 518 ***+15 V Reference*** Node 518 senses the +15 Vdc supply voltage that serves as a measurement reference.

Node Descriptions, A16 Test Set Motherboard, MASS

Node 611 ***Detector Level*** Node 611 senses the power level of the internal detector signal from the A22 switch splitter or the power level from the external detector from the rear panel.

Node 612 ***Level Output*** Node 612 senses the output of the detector log amp in the ALC.

Node 615 ***Temperature Compensation*** Node 615 senses the input voltage applied to the temperature compensation amplifier for the source ALC.

Node 616 ***Slope Compensation*** Node 616 senses the slope compensation.

Node 617 ***Log Amp Collector Voltage*** Node 617 senses the collector voltage of the source ALC log amp.

Node 618 ***Power DAC*** Node 618 senses the output voltage of the power DAC. This output is summed with other compensation signals to control the source output level. The power DAC has the most influence of the compensation signals.

Node Descriptions, A16 Test Set Motherboard, AUX 1

Node 711 ***Log Amp Breakpoint 1 Voltage*** Node 711 senses the breakpoint voltage for stage 1 of the source ALC log amp.

Node 712 ***Log Amp Breakpoint 2 Voltage*** Node 712 senses the breakpoint voltage for stage 2 of the source ALC log amp.

Node 714 ***Log Amp Offset Voltage*** Node 714 senses the offset voltage for the source ALC log amp.

Node 715 ***+10 V Reference*** Node 715 senses the +10 V supply voltage that serves as a measurement reference.

Node 716 ***Log Amp Emitter Voltage*** Node 716 senses the emitter voltage of the source ALC log amp.

Node 717 ***Temperature Compensation*** Node 717 senses the output voltage of the temperature compensation amplifier for the source ALC.

Node 718 ***SOMA 50 Prelevel DAC*** Node 718 senses the prelevel DAC voltage applied to the output of the source ALC circuitry upon analyzer startup to preset the output level of the SOMA 50.

Node Descriptions, A16 Test Set Motherboard, AUX 2

Node 811 ***–10 V Reference*** Node 811 senses the –10 V supply voltage that serves as a measurement reference.

Node 812 ***+1.78 V Bias Reference*** Node 812 senses the +1.78 V bias supply voltage that serves as a measurement reference.

Node 813 ***Phase Lock IF Detector*** Node 813 senses the voltage input to the phase lock IF detector.

Node 814 ***+10 V Reference*** Node 814 senses the +10 V supply voltage that serves as a measurement reference.

Node 815 ***–1.25 V Bias Reference*** Node 815 senses the –1.25 V bias supply voltage that serves as a measurement reference.

Node 816 ***+5 V Reference*** Node 816 senses the +5 V supply voltage that serves as a measurement reference.

Node 817 ***Logger Drive Voltage Outpu***t Node 817 senses the drive voltage applied to the source ALC log amp.

Node 818 ***Detector Voltage Output*** Node 818 senses the output voltage of the phase lock IF detector.

Source Group Tests

Equipment Used for These Tests

Equipment Type	Model or Part Number	Alternate Model or Part Number
Spectrum analyzer	8565E	None
Power meter	E4418B/19B	E4418A/19A
Power sensor, 3.5 mm	8485A	None
RF cable, 3.5 mm (f) to 3.5 mm (f)	85131C	Any

Getting Ready to Test

Before checking the assemblies, you must open the analyzer.

CAUTION Use an antistatic work surface and wrist strap to reduce the chance of electrostatic discharge for all of the procedures in this chapter.

1. Turn off the analyzer power.
2. Unplug the power to the analyzer and disconnect all rear panel connections.
3. Remove the covers from the analyzer. Refer to "Removing the Covers" on page 7-6.

WARNING **Procedures described in this document are performed with power supplied to the product while protective covers are removed. Energy available at many points may, if contacted, result in personal injury.**

4. With the covers off, plug in the analyzer and turn on the power.

Single vs. Broadband Failure

There are two main types of failures that are related to the source group. The failures are classified as:

- broadband
- single band

Single band failures are indicated by all four channel traces (or A and B or C and D traces for Options 146 and 246) having partial dropouts across the frequency range or intermittent phase lock problems. Troubleshooting information is provided under "If the trace faults are band-related," under "All Traces" on page 4-31.

Broadband failures are indicated by all four channel traces (or A and B or C and D traces for Options 146 and 246) being in the noise floor. Most often this is due to problems in the phase lock signal path and will be characterized by a "PHASE LOCK LOST" error message on the display.

A phase lock problem is due to either:

- faulty RF signal generation (caused by the A10, A9, A8, or A19 board or by the A13, A12, or A18 board for Options 146 and 246)
- faulty LO signal generation (caused by the A10, A7 or A6 board)

RF Signal Troubleshooting

To isolate a broadband RF signal generation failure, check the test port output power:

1. Connect a power meter and power sensor to Port 1 of the analyzer.
2. On the analyzer, press **Preset**, set the **Center Frequency** to **2 GHz**, and the **Frequency Span** to **0 Hz**. Note the power reading displayed on the power meter.

NOTE In the unlocked state, the analyzer will "search" for the reference signal. The output power, as indicated on the power meter, should be at least –8 dBm.

3. Connect the power sensor, in turn, to Ports 2, 3, and 4 and set trace to measure S_{22}, S_{33}, and S_{44} respectively. Note the power reading displayed on the power meter.

- If the power level is low or high on all test ports, the problem is LO signal related. Continue with "LO Signal Troubleshooting" below.
- If the power level is low or high on only one of the test ports, the problem is in the signal separation group. Go to "Checking the Signal Separation Group" on page 4-45.

LO Signal Troubleshooting

To isolate a broadband LO signal generation failure, refer to the data obtained from the "Serial Bus Test" on page 4-32:

- If the data obtained for the A10 frequency reference board is out of tolerance, confirm the failure with the following checks for the A10 board starting on page 4-38.
- If the data obtained for the A10 frequency reference board is correct but the data for the A7 fractional-N synthesizer board is out of tolerance, confirm the failure with the following checks for the A7 board starting on page 4-41.
- If the data obtained for the A9 fractional-N synthesizer board is correct—and the RF has been checked—but there is still a phase lock problem, confirm the failure with the following checks for the A6 and A20 boards starting on page 4-41.

Checking the A10 5 MHz Reference Output, All Bands

1. Refer to the block diagram at the end of this chapter and to "Top Cables, All Options Except 146/246" on page 6-12. Locate flexible cable W30 (W70 for Option 146 or 246), at the A10 frequency reference board.
2. Disconnect W30 (W70 for Option 146 or 246) from A10J10.
3. Connect the spectrum analyzer to A10J10.
4. The spectrum analyzer should measure a signal at 5 MHz.
5. If the 5 MHz signal is not present, replace the A10 frequency reference board. Refer to "Removing and Replacing the A5 through A10 Boards" on page 7-16.

6. If the 5 MHz signal is present, reconnect cable W30 (W70 for Option 146 or 246), and then continue testing at "Checking the A7 Fractional-N Synthesizer Output, Bands 0 through 3" on page 4-39.

Checking the A7 Fractional-N Synthesizer Output, Bands 0 through 3

Perform this procedure if you observe a problem in bands 0 through in all receivers.

1. Refer to the block diagram at the end of this chapter and to "Top Cables, All Options Except 146/246" on page 6-12. Locate the flexible cable W2, at the A7 fractional-N synthesizer board.
2. Disconnect W2 from A7J101.
3. Connect the spectrum analyzer to A7J101.
4. Set the network analyzer for a 500 MHz CW frequency and observe the spectrum analyzer measurement.
   - The spectrum analyzer should measure a signal at 507.66 MHz.
5. If the signal is not present and the 5 MHz reference signal is present from "Checking the A10 5 MHz Reference Output, All Bands," replace the A7 fractional-N synthesizer board. Refer to "Removing and Replacing the A5 through A10 Boards" on page 7-16.
6. If the signal is present, reconnect cable W2, and then continue with "Checking the A7 Fractional-N Synthesizer Output, Band 4" on page 4-39.

Checking the A7 Fractional-N Synthesizer Output, Band 4

Perform this procedure if you observe a problem in band 4 in all receivers.

1. Refer to the block diagram at the back of this chapter and to "Top Cables, All Options Except 146/246" on page 6-12. Locate semirigid cable W1, at the A7 fractional-N synthesizer board.

CAUTION Be careful not to damage the center pins of the semirigid cable. Some flexing of the cables is necessary to measure the output. Do not over bend them.

2. Using a 5/16 inch torque wrench, disconnect W1 at A7J106.
3. Connect the spectrum analyzer to A7J106.
4. Set the network analyzer to a CW frequency of 1 GHz.
   - The spectrum analyzer should measure a signal at 1 GHz (plus the 7.66 MHz offset).
5. If this signal is not present, replace the A7 fractional-N synthesizer board. Refer to "Removing and Replacing the A5 through A10 Boards" on page 7-16.
6. If the signal is present, leave the spectrum analyzer connected to A7J106 and continue with "Checking the A7 Fractional-N Synthesizer Output, Bands 5 through 17" on page 4-40.

Checking the A7 Fractional-N Synthesizer Output, Bands 5 through 17

Perform this procedure if you observe a problem in bands 5 through 17 in all receivers.

1. Set the network analyzer to measure a CW frequency of 2 GHz.
   - The spectrum analyzer should measure a signal at 2 GHz (plus the 7.66 MHz offset).
2. If the signal is not present, replace the A7 fractional-N synthesizer board. Refer to "Removing and Replacing the A5 through A10 Boards" on page 7-16.
3. If the signal is present, reconnect cable W1, and then continue with "Checking the A6 Multiplier Output, All Bands" on page 4-41.

Table 4-7 LO Path Frequencies

Options	Band	Network Analyzer Frequency Band of Problem (GHz)	Network Analyzer Source Frequency Setting (GHz)	Expected A7 Output Frequency (GHz)	Expected A6 Output Frequency (GHz)
140, 145, 146, 240, 245, or 246	0	0.0003 to 0.001	0.0007	0.00836	0.00836
	1	0.001 to 0.010	0.005	0.01266	0.01266
	2	0.010 to 0.040	0.025	0.03266	0.03266
	3	0.040 to 0.748	0.060	0.06766	0.06766
	4	0.748 to 1.500	1.100	1.10766	1.10766
	5	1.500 to 3.125	2.200	2.20766	2.20766
	6	3.125 to 4.167	3.600	1.80383	3.60766
	7	4.167 to 5.250	4.600	2.30383	4.60766
	8	5.250 to 6.250	5.700	2.85383	5.70766
	9	6.250 to 8.333	6.700	1.67692	6.70766
	10	8.333 to 9.800	9.000	2.25192	9.00766
	11	9.800 to 10.500	10.200	2.55192	10.20766
	12	10.500 to 12.500	11.500	1.91794	3.83588
	13*	12.500 to 13.500	13.000	2.17050	4.34099
240, 245, or 246	13**	12.500 to 15.000	13.700	2.28461	4.56922
	14	15.000 to 15.750	15.400	2.56794	5.13588
	15	15.750 to 16.667	16.200	2.70128	5.40255
	16	16.667 to 18.750	17.700	2.95128	5.90255
	17	18.750 to 20.000	19.300	1.60897	6.43588

* Applies to 13.5 GHz analyzers only.
** Applies to 20 GHz analyzers only.

Checking the A6 Multiplier Output, All Bands

Perform this procedure if you observe a problem in all bands in all receivers.

1. Refer to the block diagram at the end of this chapter and to "Top Cables, All Options Except 146/246" on page 6-12. Locate the flexible cable W3, at the A6 multiplier board.
2. Disconnect W2 from the A6 board.
3. Connect the spectrum analyzer to the open connector.
4. Set the network analyzer for a 2 GHz CW frequency and observe the spectrum analyzer measurement.
   - The spectrum analyzer should measure a signal at 2 GHz (plus the 7.66 MHz offset).
5. If the signal is not present and the signals are present from "Checking the A7 Fractional-N Synthesizer Output, Bands 5 through 17," replace the A6 multiplier board. Refer to "Removing and Replacing the A5 through A10 Boards" on page 7-16.
6. If the signal is present, reconnect cable W3, and then continue with "Checking the A9 Fractional-N Synthesizer Output, Bands 0 through 3" on page 4-41.

Checking the A9 Fractional-N Synthesizer Output, Bands 0 through 3

Perform this procedure if you observe a problem in bands 0 through 3 in all receivers, or in the A and B receivers for Options 146 and 246.

1. Refer to the block diagram at the end of this chapter and to "Top Cables, All Options Except 146/246" on page 6-12. Locate the flexible cable W5, at the A9 fractional-N synthesizer board.
2. Disconnect W5 from A9J101.
3. Connect the spectrum analyzer to A9J101.
4. Set the network analyzer for a 500 MHz CW frequency and observe the spectrum analyzer measurement.
   - The spectrum analyzer should measure a signal at 507.66 MHz.
5. If the signal is not present and the 5 MHz reference signal is present from "Checking the A10 5 MHz Reference Output, All Bands," replace the A9 fractional-N synthesizer board. Refer to "Removing and Replacing the A5 through A10 Boards" on page 7-16.
6. If the signal is present, reconnect cable W5, and then continue with "Checking the A9 Fractional-N Synthesizer Output, Band 4" on page 4-41.

Checking the A9 Fractional-N Synthesizer Output, Band 4

Perform this procedure if you observe a problem in band 4 in all receivers, or in the A and B receivers for Options 146 and 246.

1. Refer to the block diagram at the back of this chapter and to "Top Cables, All Options Except 146/246" on page 6-12. Locate semirigid cable W4, at the A9 fractional-N synthesizer board.

CAUTION Be careful not to damage the center pins of the semirigid cable. Some flexing of the cables is necessary to measure the output.

2. Using a 5/16 inch torque wrench, disconnect W4 at A9J106.
3. Connect the spectrum analyzer to A9J106.
4. Set the network analyzer to a CW frequency of 1 GHz.
   - The spectrum analyzer should measure a signal at 1 GHz (plus the 7.66 MHz offset).
5. If this signal is not present, replace the A9 fractional-N synthesizer board. Refer to "Removing and Replacing the A5 through A10 Boards" on page 7-16.
6. If the signal is present, leave the spectrum analyzer connected to A9J106 and continue with "Checking the A9 Fractional-N Synthesizer Output, Bands 5 through 17" on page 4-42.

Checking the A9 Fractional-N Synthesizer Output, Bands 5 through 17

Perform this procedure if you observe a problem in bands 5 through 17 in all receivers, or in the A and B receivers for Options 146 and 246.

1. Set the network analyzer to a CW frequency of 2 GHz.
   - The spectrum analyzer should measure a signal at 2 GHz (plus the 7.66 MHz offset).
2. If the signal is not present, replace the A9 fractional-N synthesizer board. Refer to "Removing and Replacing the A5 through A10 Boards" on page 7-16.
3. If the signal is present, reconnect cable W4, and then continue with "Checking the A8 Multiplier Output, All Bands" on page 4-42.

Checking the A8 Multiplier Output, All Bands

Perform this procedure if you observe a problem in all bands in all receivers, or in the A and B receivers for Options 146 and 246.

1. Refer to the block diagram at the end of this chapter and to "Top Cables, All Options Except 146/246" on page 6-12. Locate the flexible cable W6, at the A8 multiplier board.
2. Disconnect W6 from the A8 board.
3. Connect the spectrum analyzer to the open connector.
4. Set the network analyzer for a 2 GHz CW frequency and observe the spectrum analyzer measurement.
   - The spectrum analyzer should measure a signal at 2 GHz (plus the 7.66 MHz offset).
5. If the signal is not present and the signals are present from "Checking the A9 Fractional-N Synthesizer Output, Bands 5 through 17," replace the A8 multiplier board. Refer to "Removing and Replacing the A5 through A10 Boards" on page 7-16.
6. If the signal is present, reconnect cable W6, and then continue with "Checking the Signal Separation Group" on page 4-45.

Checking the A13 Fractional-N Synthesizer Output, Bands 0 through 3 (Options 146 and 246)

Perform this procedure if you observe a problem in bands 0 through 3 in the C and D receivers.

1. Refer to the block diagram at the end of this chapter and to "Top Cables, Options 146/246 (Side View)" on page 6-18. Locate the flexible cable W62, at the A13 fractional-N synthesizer board.
2. Disconnect W62 from A13J101.
3. Connect the spectrum analyzer to A13J101.
4. Set the network analyzer for an S_{33} measurement at a CW frequency if 500 MHz and observe the spectrum analyzer measurement.
   - The spectrum analyzer should measure a signal at 507.66 MHz.
5. If the signal is not present and the 5 MHz reference signal is present from "Checking the A10 5 MHz Reference Output, All Bands," replace the A13 fractional-N synthesizer board. Refer to "Removing and Replacing the A12 Multiplier and the A13 Fractional-N Synthesizer Boards" on page 7-20.
6. If the signal is present, reconnect cable W62, and then continue with "Checking the A13 Fractional-N Synthesizer Output, Band 4 (Options 146 and 246)" on page 4-43.

Checking the A13 Fractional-N Synthesizer Output, Band 4 (Options 146 and 246)

Perform this procedure if you observe a problem in band 4 in the C and D receivers.

1. Refer to the block diagram at the back of this chapter and to "Top Cables, Options 146/246 (Side View)" on page 6-18. Locate semirigid cable W61, at the A13 fractional-N synthesizer board.

CAUTION Be careful not to damage the center pins of the semirigid cable. Some flexing of the cables is necessary to measure the output.

2. Using a 5/16 inch torque wrench, disconnect W61 at A13J106.
3. Connect the spectrum analyzer to A13J106.
4. Set the network analyzer to an S_{33} measurement at a CW frequency of 1 GHz.
   - The spectrum analyzer should measure a signal at 1 GHz (plus the 7.66 MHz offset).
5. If this signal is not present, replace the A13 fractional-N synthesizer board. Refer to "Removing and Replacing the A12 Multiplier and the A13 Fractional-N Synthesizer Boards" on page 7-20.
6. If the signal is present, leave the spectrum analyzer connected to A13J106 and continue with "Checking the A13 Fractional-N Synthesizer Output, Bands 5 through 17 (Options 146 and 246)" on page 4-44.

Checking the A13 Fractional-N Synthesizer Output, Bands 5 through 17 (Options 146 and 246)

Perform this procedure if you observe a problem in bands 5 through 17 in the C and D receivers.

1. Set the network analyzer for an S_{33} measurement at a CW frequency of 2 GHz.
   - The spectrum analyzer should measure a signal at 2 GHz (plus the 7.66 MHz offset).
2. If the signal is not present, replace the A13 fractional-N synthesizer board. Refer to "Removing and Replacing the A12 Multiplier and the A13 Fractional-N Synthesizer Boards" on page 7-20.
3. If the signal is present, reconnect cable W61, and then continue with "Checking the A12 Multiplier Output, All Bands (Options 146 and 246)" on page 4-44.

Checking the A12 Multiplier Output, All Bands (Options 146 and 246)

Perform this procedure if you observe a problem in all bands in the C and D receivers.

1. Refer to the block diagram at the end of this chapter and to "Top Cables, Options 146/246 (Side View)" on page 6-18. Locate the flexible cable W63, at the A12 multiplier board.
2. Disconnect W63 from the A12 board.
3. Connect the spectrum analyzer to the open connector.
4. Set the network analyzer for an S_{33} measurement at a CW frequency of 2 GHz and observe the spectrum analyzer measurement.
   - The spectrum analyzer should measure a signal at 2 GHz (plus the 7.66 MHz offset).
5. If the signal is not present and the signals are present from "Checking the A13 Fractional-N Synthesizer Output, Bands 5 through 17 (Options 146 and 246)," replace the A12 multiplier board. Refer to "Removing and Replacing the A12 Multiplier and the A13 Fractional-N Synthesizer Boards" on page 7-20.
6. If the signal is present, reconnect cable W63, and then continue with "Checking the Signal Separation Group" on page 4-45.

Checking the Signal Separation Group

Before checking the signal separation group, perform the following procedures:

- "Getting Ready to Test" on page 4-37

Checking the Output Power of the A, B, C, and D Signals

Using a power meter, you can measure the outputs of the A, B, C, and D signals from the front panel. The measurement results will help you isolate a faulty assembly. The output of the R channel cannot be measured because it would necessitate breaking the phase lock loop, causing all of the signals to be lost.

Equipment Used for These Tests

Equipment Type	Model or Part Number	Alternate Model or Part Number
Power meter	E4418B/E441B	E4418A/E4419A
Power sensor, 3.5 mm	E8485A	None
Adapter, 3.5 mm (f) to 3.5 mm (f)	83059B	85052-60012

Equipment Setup

1. Before starting these checks, zero and calibrate the power meter. (See the power meter user's guide for instructions on setting the calibration factor.)
2. If the **Receiver Display** (Figure 4-9 or Figure 4-10) is not on the analyzer screen, perform the following: On the **System** menu, point to **Service, Utilities,** and then click **Receiver Display.**
3. Set the sweep speed for a 10 second sweep: On the **Sweep** menu, click **Sweep Time** and set the time to 10.000 seconds in the **Sweep Time** box.

Checking Port 1, 2, 3, or 4 Power Outputs (A, B, C, or D Signals)

The object of this check is to verify the power of the output signal across the entire frequency range. Perform this test if there is an observed problem only with one channel trace. The ten second sweep is slow enough to allow you to observe the output power on the power meter as the sweep occurs.

1. Connect the power sensor to the suspect port.
2. Observe the power reading on the power meter as the sweep occurs on the analyzer.
3. The measured output power on the power meter should be at least –8 dBm over the entire frequency range.
   - If the measured power is correct, go to "Checking the Receiver Group" on page 4-49.
   - If the measured power is not correct, go to "Checking the Signal through the Signal Separation Path" on page 4-46.

Checking the Signal through the Signal Separation Path

For all of the following checks, refer to the block diagrams at the end of this chapter and to:

- "Bottom Assemblies, Options 140 and 240" on page 6-20
- "Bottom Assemblies, Options 146 and 246" on page 6-28

Trace loss in the signal separation group is due to one or more of the following assemblies being defective:

- A18 MASSQuad (Options 146 and 246 only)
- A19 MASSQuad
- A25 source step attenuator (Options 145, 245, 146, and 246 only)
- A26 source step attenuator (Options 146 and 246 only)
- A21, A22, A23, or A24 test port coupler

Equipment Used for These Tests

Equipment Type	Model or Part Number	Alternate Model or Part Number
Spectrum analyzer	8565E	856xE[a]

a. Must be capable of measuring a signal at 1 GHz.

To determine which assembly is defective, check the signal at each available measurement point in the signal path from the switch splitter in the A19 MASSQuad (and A18 MASSQuad for Options 146 and 246) to the output port.

For Port 1 measurements, set the network analyzer for an S_{11} measurement with a CW frequency of 1 GHz.

For Port 2, 3, and 4 measurements, set the network analyzer for an S_{22}, S_{33}, or S_{44}, measurement with a CW frequency of 1 GHz.

Perform the following checks in the order presented.

Checking the A19 MASSQuad A18 MASSQuad and the A21–A24 Test Port Couplers

1. Locate the following semirigid cable at the appropriate output of the either the A19 or A18 MASSQuad:
   - Analyzers with Options 140 and 240
     - — Port 1; W8 of A19
     - — Port 2; W9 of A19
     - — Port 3; W10 of A19
     - — Port 4; W11 or A19

- Analyzers with Options 145 and 245
  - — Port; W40 of A19
  - — Port 2; W41 of A19
  - — Port 3; W42 of A19
  - — Port 4; W43 of A19
- Analyzers with Options 146 and 246
  - — Port 1; W40 of A19
  - — Port 2; W41 of A19
  - — Port 3; W64 of A18
  - — Port 4; W65 of A18

2. Using a 5/16-inch torque wrench, disconnect the semirigid cable at the MASSQuad.
3. Connect the spectrum analyzer to the open connector. Set the spectrum analyzer to measure a signal at 1 GHz.
4. If the 1 GHz signal is not present and the analyzer has a source step attenuator, reconnect the cable to the MASSQuad and continue testing at "Checking the A25 60-dB Source Step Attenuator (Options 145, 245, 146, and 246)" on page 4-47 or "Checking the A26 60-dB Source Step Attenuator (Options 146 and 246)" on page 4-48, whichever is appropriate.
5. If the 1 GHz signal is not present and the analyzer does not have a source step attenuator, replace the MASSQuad Refer to "Removing and Replacing the A19 MASS 26.5 (MASSQuad) and MASSQuad Mounting Block" on page 7-32 or "Removing and Replacing the A18 MASS 26.5 (MASSQuad)" on page 7-30, whichever is appropriate.
6. If the 1 GHz signal is present, reconnect the cable to the MASSQuad and replace the appropriate test port coupler. Refer to "Removing and Replacing the A21, A22, A23, and A24 Test Port Couplers and Coupler Mounting Blocks" on page 7-36.

Checking the A25 60-dB Source Step Attenuator (Options 145, 245, 146, and 246)

1. Locate semirigid cable W59 at the output of the A25 source step attenuator.
2. Using a 5/16-inch torque wrench, disconnect the semirigid cable at the A25 step attenuator.
3. Connect the spectrum analyzer to the A25 step attenuator connector. Set the spectrum analyzer to measure a signal at 1 GHz.
4. If the 1 GHz signal is not present, continue troubleshooting at "Checking the Output of the A19 MASSQuad to the A25 Source Step Attenuator (Options 145, 245, 146, and 246)" on page 4-48.
5. If the 1 GHz signal is present, replace the A19 MASSQuad. Refer to "Removing and Replacing the A19 MASS 26.5 (MASSQuad) and MASSQuad Mounting Block" on page 7-32.

Checking the Output of the A19 MASSQuad to the A25 Source Step Attenuator (Options 145, 245, 146, and 246)

1. Locate semirigid cable W58 at the output of the A19 MASSQuad that goes to the input of the A25 source step attenuator.
2. Using a 5/16-inch torque wrench, disconnect the semirigid cable at the A19 MASSQuad.
3. Connect the spectrum analyzer to the A19 MASSQuad connector. Set the spectrum analyzer to measure a signal at 1 GHz.
4. If the 1 GHz signal is not present, replace the A19 MASSQuad. Refer to "Removing and Replacing the A19 MASS 26.5 (MASSQuad) and MASSQuad Mounting Block" on page 7-32.
5. If the 1 GHz signal is present, replace the A25 step attenuator. Refer to."Removing and Replacing the A25 60-dB Source Step Attenuator" on page 7-38.

Checking the A26 60-dB Source Step Attenuator (Options 146 and 246)

1. Locate semirigid cable W79 at the output of the A26 source step attenuator.
2. Using a 5/16-inch torque wrench, disconnect the semirigid cable at the A26 step attenuator.
3. Connect the spectrum analyzer to the A26 step attenuator connector. Set the spectrum analyzer to measure a signal at 1 GHz. Set the network analyzer for an S_{33} measurement.
4. If the 1 GHz signal is not present, continue troubleshooting at "Checking the Output of the A18 MASSQuad to the A26 Source Step Attenuator (Options 146 and 246)" on page 4-48.
5. If the 1 GHz signal is present, replace the A18 MASSQuad. Refer to "Removing and Replacing the A18 MASS 26.5 (MASSQuad)" on page 7-30.

Checking the Output of the A18 MASSQuad to the A26 Source Step Attenuator (Options 146 and 246)

1. Locate semirigid cable W78 at the output of the A18 MASSQuad that goes to the input of the A26 source step attenuator.
2. Using a 5/16-inch torque wrench, disconnect the semirigid cable at the A18 MASSQuad.
3. Connect the spectrum analyzer to the A18 MASSQuad connector. Set the spectrum analyzer to measure a signal at 1 GHz. Set the network analyzer for an S_{33} measurement.
4. If the 1 GHz signal is not present, replace the A18 MASSQuad. Refer to "Removing and Replacing the A18 MASS 26.5 (MASSQuad)" on page 7-30.
5. If the 1 GHz signal is present, replace the A26 step attenuator. Refer to."Removing and Replacing the A26 60-dB Source Step Attenuator" on page 7-40.

Checking the Receiver Group

Equipment Used for These Tests

Equipment Type	Model or Part Number	Alternate Model or Part Number
Spectrum analyzer	8565E	856xE[a]

a. Must be capable of measuring a signal at 7.66 MHz.

Getting Ready to Test

Before checking the assemblies, you must open the analyzer.

CAUTION Use an antistatic work surface and wrist strap to reduce the chance of electrostatic discharge for all of the procedures in this chapter.

1. Turn off the analyzer power.
2. Unplug the power to the analyzer and disconnect all rear panel connections.
3. Remove the covers from the analyzer. Refer to "Removing the Covers" on page 7-6.
4. With the covers off, plug in the analyzer and turn on the power.
5. For Port 1 measurements, set the network analyzer for an S_{11} measurement with a CW frequency of 1 GHz.

   For Port 2, 3, or 4 measurements, set the network analyzer for an S_{22}, S_{33}, or S_{44} measurement with a CW frequency of 1 GHz.

Checking the A20 Mixer Brick Receiver Outputs

Perform this procedure if a problem appears to be in one of the receiver channels.

1. Refer to the block diagram at the end of this chapter and to "Bottom Assemblies, Options 140 and 240" on page 6-20. Locate the flexible cables W21, W22, W23, W24, and W25 at each receiver channel IF output, A, B, C, D, and R respectively.
2. Disconnect the flexible cable at the suspect channel.
3. Connect the spectrum analyzer to the suspect channel connector.
4. Make sure that the analyzer's spur avoidance feature is OFF and that all front-panel jumpers are installed. The measured signal on the spectrum analyzer should be at 7.66 MHz.
   - If the measured signal is present, replace the A5 SPAM board. Refer to "Removing and Replacing the A5 through A10 Boards" on page 7-16.
5. If the measured signal is not present on the R channel and the analyzer is equipped with Option 146 or 246, continue troubleshooting at "Checking the A29 Reference Channel Switch, Limiter, and DC Block (Options 146 and 246 Only)" on page 4-50.

   If the measured signal is not present on the A, B, C, or D channels and the analyzer is equipped with Option 146 or 246, replace the A20 mixer brick. Refer to "Removing and Replacing the A20 Mixer Brick (QuintBrick)" on page 7-34.

If the measured signal is not present on any of the channels and the analyzer is not equipped with Option 146 or 246, replace the A20 mixer brick. Refer to "Removing and Replacing the A20 Mixer Brick (QuintBrick)" on page 7-34.

Checking the A29 Reference Channel Switch, Limiter, and DC Block (Options 146 and 246 Only)

1. Set the network analyzer for an S_{11} measurement with a CW frequency of 1 GHz.
2. Connect a spectrum analyzer to the front-panel **Reference Source Out** connector.
3. If the measured signal is present, continue with step 5.
4. If the measured signal is not present replace the A29 reference channel switch, the limiter, or the DC block. Refer to "Removing and Replacing the A29 Reference Switch, Limiter, and DC Block" on page 7-42.
5. Set the network analyzer for an S_{33} measurement.
6. If the measured signal is present, replace the A20 mixer brick. Refer to "Removing and Replacing the A20 Mixer Brick (QuintBrick)" on page 7-34.
7. If the measured signal is not present replace the A29 reference channel switch, the limiter, or the DC block. Refer to "Removing and Replacing the A29 Reference Switch, Limiter, and DC Block" on page 7-42.

N5230A PNA-L Overall Block Diagram
4-Port, 300 kHz to 13.5 GHz and 20 GHz
Options 140 and 240
Service Guide: N5230-90013

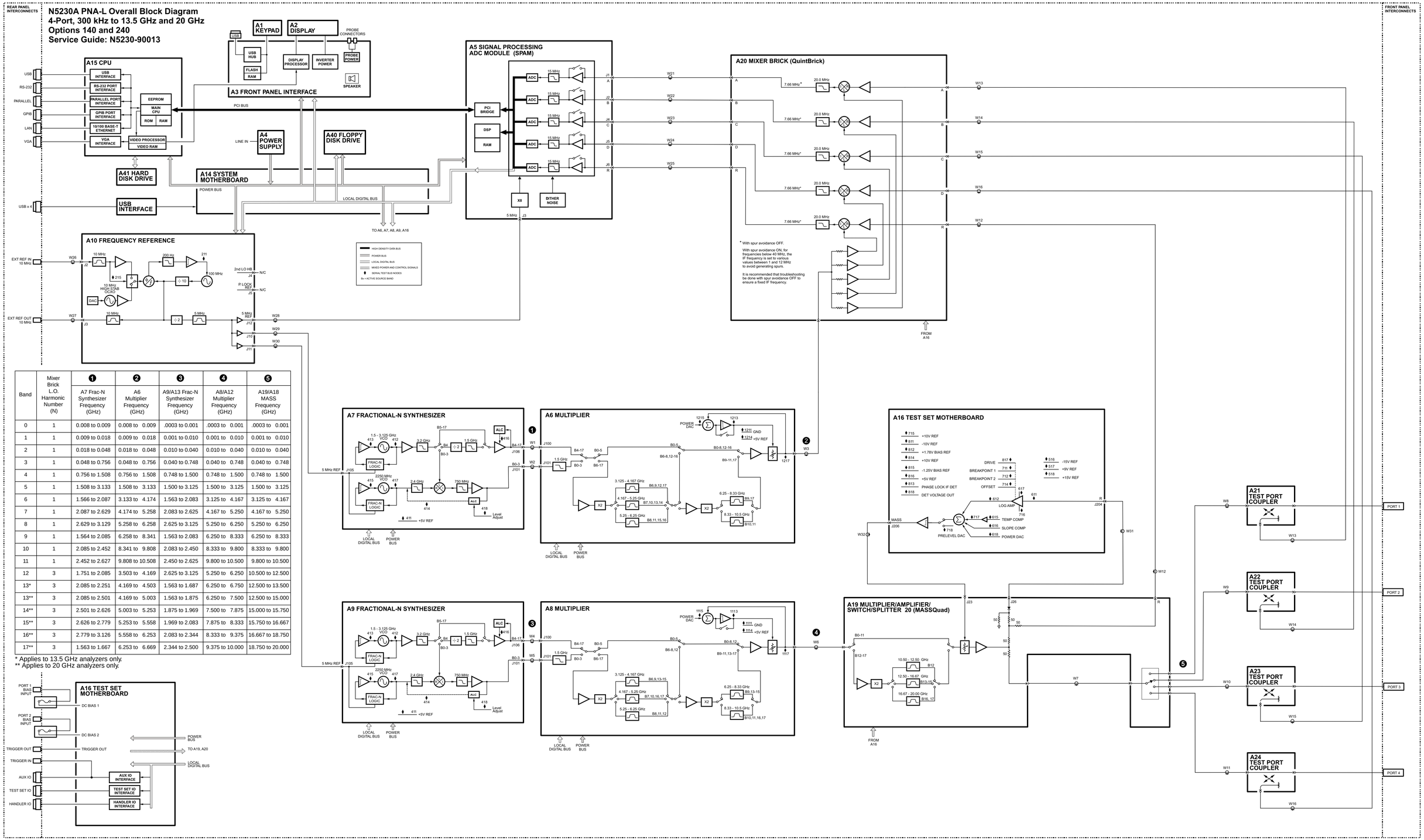

Band	Mixer Brick L.O. Harmonic Number (N)	❶ A7 Frac-N Synthesizer Frequency (GHz)	❷ A6 Multiplier Frequency (GHz)	❸ A9/A13 Frac-N Synthesizer Frequency (GHz)	❹ A8/A12 Multiplier Frequency (GHz)	❺ A19/A18 MASS Frequency (GHz)
0	1	0.008 to 0.009	0.008 to 0.009	.0003 to 0.001	.0003 to 0.001	.0003 to 0.001
1	1	0.009 to 0.018	0.009 to 0.018	0.001 to 0.010	0.001 to 0.010	0.001 to 0.010
2	1	0.018 to 0.048	0.018 to 0.048	0.010 to 0.040	0.010 to 0.040	0.010 to 0.040
3	1	0.048 to 0.756	0.048 to 0.756	0.040 to 0.748	0.040 to 0.748	0.040 to 0.748
4	1	0.756 to 1.508	0.756 to 1.508	0.748 to 1.500	0.748 to 1.500	0.748 to 1.500
5	1	1.508 to 3.133	1.508 to 3.133	1.500 to 3.125	1.500 to 3.125	1.500 to 3.125
6	1	1.566 to 2.087	3.133 to 4.174	1.563 to 2.083	3.125 to 4.167	3.125 to 4.167
7	1	2.087 to 2.629	4.174 to 5.258	2.083 to 2.625	4.167 to 5.250	4.167 to 5.250
8	1	2.629 to 3.129	5.258 to 6.258	2.625 to 3.125	5.250 to 6.250	5.250 to 6.250
9	1	1.564 to 2.085	6.258 to 8.341	1.563 to 2.083	6.250 to 8.333	6.250 to 8.333
10	1	2.085 to 2.452	8.341 to 9.808	2.083 to 2.450	8.333 to 9.800	8.333 to 9.800
11	1	2.452 to 2.627	9.808 to 10.508	2.450 to 2.625	9.800 to 10.500	9.800 to 10.500
12	3	1.751 to 2.085	3.503 to 4.169	2.625 to 3.125	5.250 to 6.250	10.500 to 12.500
13*	3	2.085 to 2.251	4.169 to 4.503	1.563 to 1.687	6.250 to 6.750	12.500 to 13.500
13**	3	2.085 to 2.501	4.169 to 5.003	1.563 to 1.875	6.250 to 7.500	12.500 to 15.000
14**	3	2.501 to 2.626	5.003 to 5.253	1.875 to 1.969	7.500 to 7.875	15.000 to 15.750
15**	3	2.626 to 2.779	5.253 to 5.558	1.969 to 2.083	7.875 to 8.333	15.750 to 16.667
16**	3	2.779 to 3.126	5.558 to 6.253	2.083 to 2.344	8.333 to 9.375	16.667 to 18.750
17**	3	1.563 to 1.667	6.253 to 6.669	2.344 to 2.500	9.375 to 10.000	18.750 to 20.000

* Applies to 13.5 GHz analyzers only.
** Applies to 20 GHz analyzers only.

n5230abk_140_240
29 August 2006

Agilent Technologies

N5230A PNA-L Overall Block Diagram
4-Port, 300 kHz to 13.5 GHz and 20 GHz
Options 145 and 245
Service Guide: N5230-90013

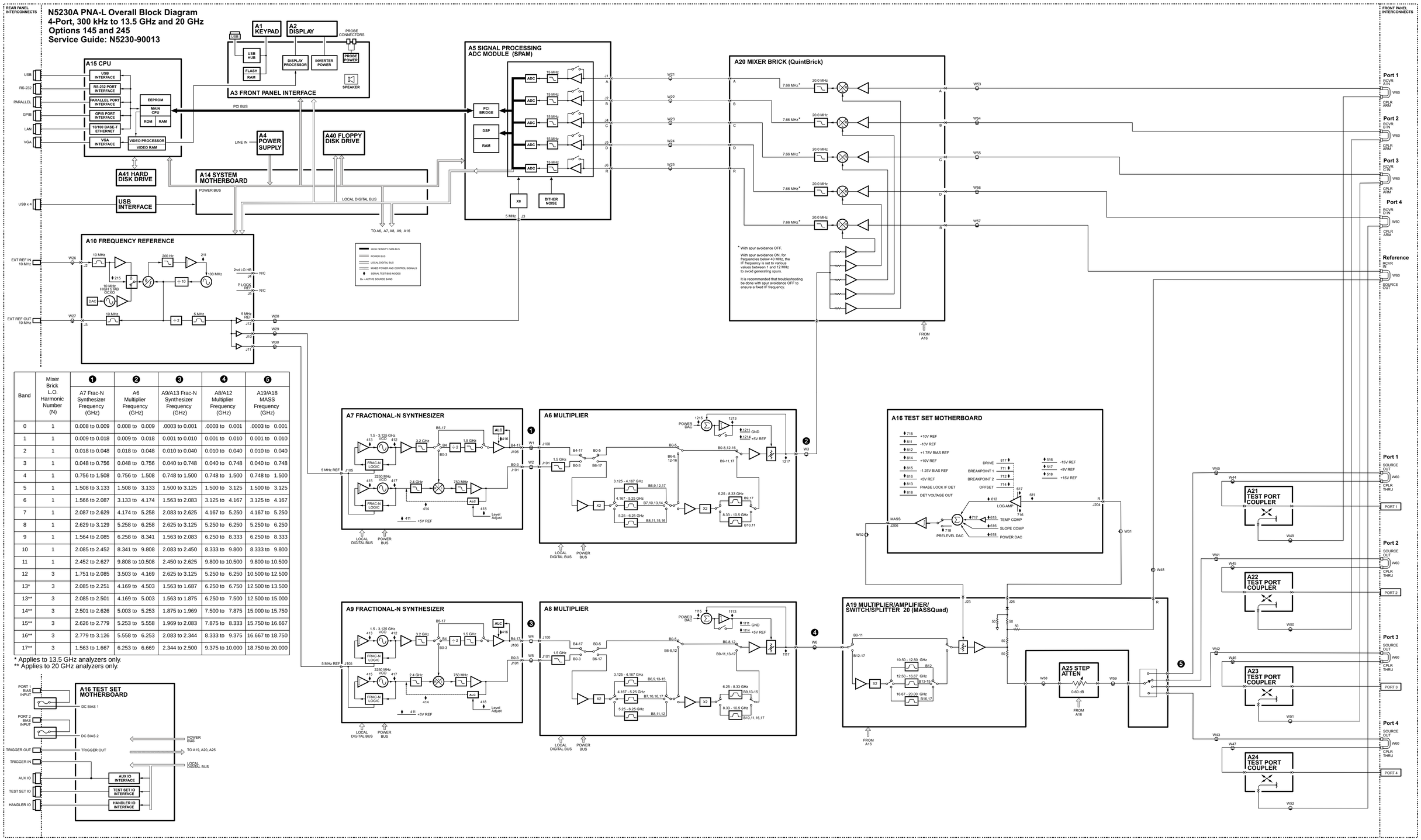

Band	Mixer Brick L.O. Harmonic Number (N)	❶ A7 Frac-N Synthesizer Frequency (GHz)	❷ A6 Multiplier Frequency (GHz)	❸ A9/A13 Frac-N Synthesizer Frequency (GHz)	❹ A8/A12 Multiplier Frequency (GHz)	❺ A19/A18 MASS Frequency (GHz)
0	1	0.008 to 0.009	0.008 to 0.009	.0003 to 0.001	.0003 to 0.001	.0003 to 0.001
1	1	0.009 to 0.018	0.009 to 0.018	0.001 to 0.010	0.001 to 0.010	0.001 to 0.010
2	1	0.018 to 0.048	0.018 to 0.048	0.010 to 0.040	0.010 to 0.040	0.010 to 0.040
3	1	0.048 to 0.756	0.048 to 0.756	0.040 to 0.748	0.040 to 0.748	0.040 to 0.748
4	1	0.756 to 1.508	0.756 to 1.508	0.748 to 1.500	0.748 to 1.500	0.748 to 1.500
5	1	1.508 to 3.133	1.508 to 3.133	1.500 to 3.125	1.500 to 3.125	1.500 to 3.125
6	1	1.566 to 2.087	3.133 to 4.174	1.563 to 2.083	3.125 to 4.167	3.125 to 4.167
7	1	2.087 to 2.629	4.174 to 5.258	2.083 to 2.625	4.167 to 5.250	4.167 to 5.250
8	1	2.629 to 3.129	5.258 to 6.258	2.625 to 3.125	5.250 to 6.250	5.250 to 6.250
9	1	1.564 to 2.085	6.258 to 8.341	1.563 to 2.083	6.250 to 8.333	6.250 to 8.333
10	1	2.085 to 2.452	8.341 to 9.808	2.083 to 2.450	8.333 to 9.800	8.333 to 9.800
11	1	2.452 to 2.627	9.808 to 10.508	2.450 to 2.625	9.800 to 10.500	9.800 to 10.500
12	3	1.751 to 2.085	3.503 to 4.169	2.625 to 3.125	5.250 to 6.250	10.500 to 12.500
13*	3	2.085 to 2.251	4.169 to 4.503	1.563 to 1.687	6.250 to 6.750	12.500 to 13.500
13**	3	2.085 to 2.501	4.169 to 5.003	1.563 to 1.875	6.250 to 7.500	12.500 to 15.000
14**	3	2.501 to 2.626	5.003 to 5.253	1.875 to 1.969	7.500 to 7.875	15.000 to 15.750
15**	3	2.626 to 2.779	5.253 to 5.558	1.969 to 2.083	7.875 to 8.333	15.750 to 16.667
16**	3	2.779 to 3.126	5.558 to 6.253	2.083 to 2.344	8.333 to 9.375	16.667 to 18.750
17**	3	1.563 to 1.667	6.253 to 6.669	2.344 to 2.500	9.375 to 10.000	18.750 to 20.000

* Applies to 13.5 GHz analyzers only.
** Applies to 20 GHz analyzers only.

N5230A PNA-L Overall Block Diagram
4-Port, 300 kHz to 13.5 GHz and 20 GHz
Options 146 and 246
Service Guide: N5230-90013

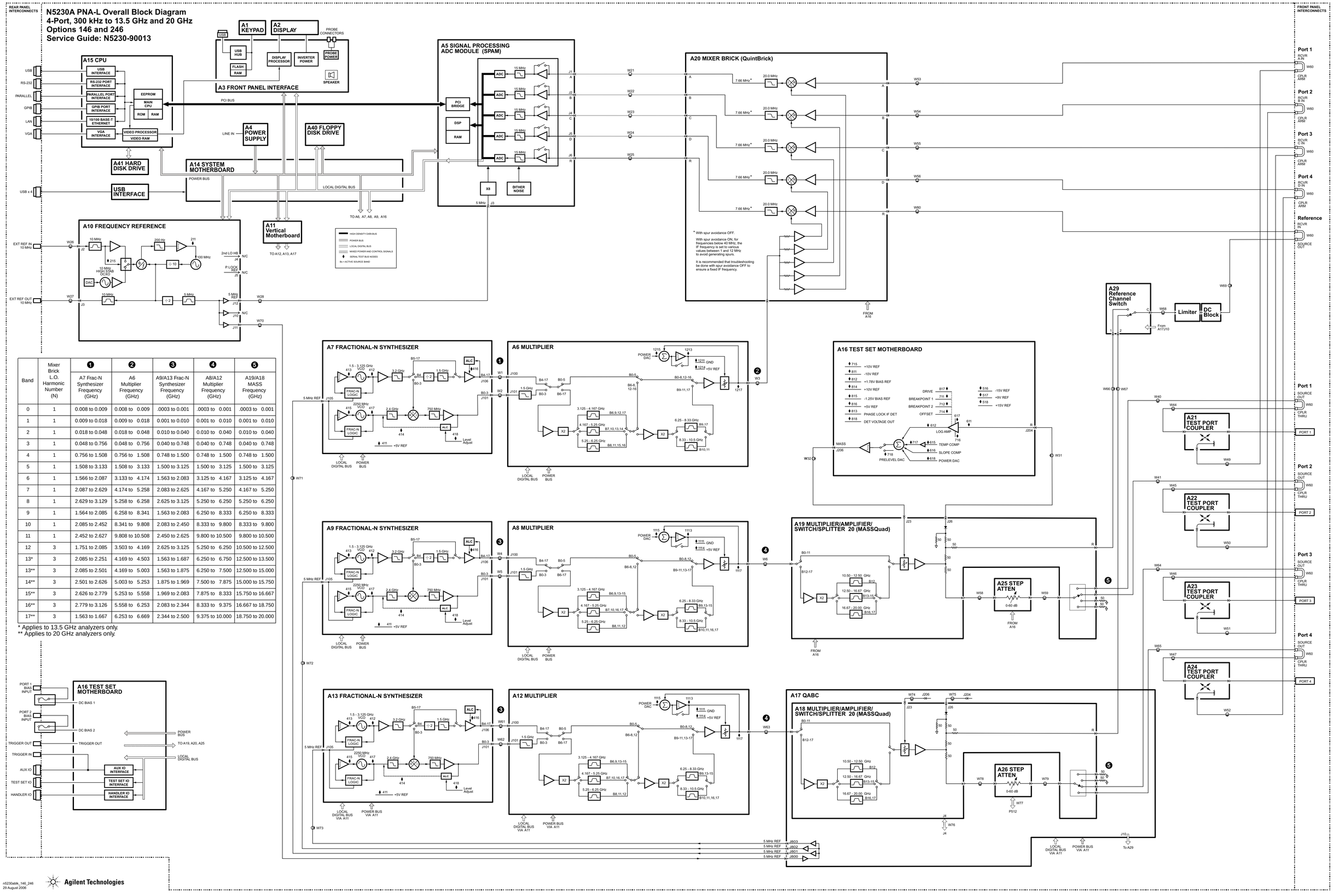

Band	Mixer Brick L.O. Harmonic Number (N)	❶ A7 Frac-N Synthesizer Frequency (GHz)	❷ A6 Multiplier Frequency (GHz)	❸ A9/A13 Frac-N Synthesizer Frequency (GHz)	❹ A8/A12 Multiplier Frequency (GHz)	❺ A19/A18 MASS Frequency (GHz)
0	1	0.008 to 0.009	0.008 to 0.009	.0003 to 0.001	.0003 to 0.001	.0003 to 0.001
1	1	0.009 to 0.018	0.009 to 0.018	0.001 to 0.010	0.001 to 0.010	0.001 to 0.010
2	1	0.018 to 0.048	0.018 to 0.048	0.010 to 0.040	0.010 to 0.040	0.010 to 0.040
3	1	0.048 to 0.756	0.048 to 0.756	0.040 to 0.748	0.040 to 0.748	0.040 to 0.748
4	1	0.756 to 1.508	0.756 to 1.508	0.748 to 1.500	0.748 to 1.500	0.748 to 1.500
5	1	1.508 to 3.133	1.508 to 3.133	1.500 to 3.125	1.500 to 3.125	1.500 to 3.125
6	1	1.566 to 2.087	3.133 to 4.174	1.563 to 2.083	3.125 to 4.167	3.125 to 4.167
7	1	2.087 to 2.629	4.174 to 5.258	2.083 to 2.625	4.167 to 5.250	4.167 to 5.250
8	1	2.629 to 3.129	5.258 to 6.258	2.625 to 3.125	5.250 to 6.250	5.250 to 6.250
9	1	1.564 to 2.085	6.258 to 8.341	1.563 to 2.083	6.250 to 8.333	6.250 to 8.333
10	1	2.085 to 2.452	8.341 to 9.808	2.083 to 2.450	8.333 to 9.800	8.333 to 9.800
11	1	2.452 to 2.627	9.808 to 10.508	2.450 to 2.625	9.800 to 10.500	9.800 to 10.500
12	3	1.751 to 2.085	3.503 to 4.169	2.625 to 3.125	5.250 to 6.250	10.500 to 12.500
13*	3	2.085 to 2.251	4.169 to 4.503	1.563 to 1.687	6.250 to 6.750	12.500 to 13.500
13**	3	2.085 to 2.501	4.169 to 5.003	1.563 to 1.875	6.250 to 7.500	12.500 to 15.000
14**	3	2.501 to 2.626	5.003 to 5.253	1.875 to 1.969	7.500 to 7.875	15.000 to 15.750
15**	3	2.626 to 2.779	5.253 to 5.558	1.969 to 2.083	7.875 to 8.333	15.750 to 16.667
16**	3	2.779 to 3.126	5.558 to 6.253	2.083 to 2.344	8.333 to 9.375	16.667 to 18.750
17**	3	1.563 to 1.667	6.253 to 6.669	2.344 to 2.500	9.375 to 10.000	18.750 to 20.000

* Applies to 13.5 GHz analyzers only.
** Applies to 20 GHz analyzers only.

Agilent Technologies

5 Theory of Operation

Information in This Chapter

This chapter provides a general description of the operating theory of the N5230A 4-port PNA-L microwave network analyzer.

- Theory of operation is explained to the assembly level only.
- Component-level circuit theory is not provided.
- Simplified block diagrams are included for each functional group.
- More detailed block diagrams are located at the end of Chapter 4, "Troubleshooting."

IMPORTANT Although simplified block diagrams are included within the description of each functional group, it is recommended that the more detailed block diagrams, located at the end of Chapter 4, be unfolded and available for reference, as you read the information in this chapter.

Chapter Five at-a-Glance

Section Title	Summary of Content	Start Page
Network Analyzer System Operation	A summary of the theory of operation for the analyzer. A summary of the operation of the major functional groups of the analyzer.	Page 5-3
Synthesized Source Group Operation	Operation of the assemblies associated with the source group, including Option 080, frequency offset mode.	Page 5-6
Signal Separation Group Operation	Operation of the assemblies associated with signal separation, including the operation of Option 014, configurable test set, and Option 1E1, source step attenuators.	Page 5-16
Receiver Group Operation	Operation of the assemblies associated with the receiver group.	Page 5-22
Digital Processing and Digital Control Group Operation	Operation of the assemblies associated with digital processing and control.	Page 5-25
Power Supply Group Operation	Operation of the power supply assembly group.	Page 5-30

Network Analyzer System Operation

The PNA-L network analyzer generates a phase-locked incident signal and an LO signal from the internal synthesized source. By means of signal separation, the incident signal is divided into a reference signal and a test signal.

The reference signal is applied to the receiver group, while the test signal is applied to the device under test (DUT) and then to the receiver group. The LO signal is applied directly to the receiver group where it is mixed with the test and reference signals to produce IF signals for each of the four channels. These IF signals are downconverted and then sampled and digitally processed. Figure 5-1 is a simplified block diagram of the network analyzer system.

Figure 5-1 System Simplified Block Diagram (One Source)

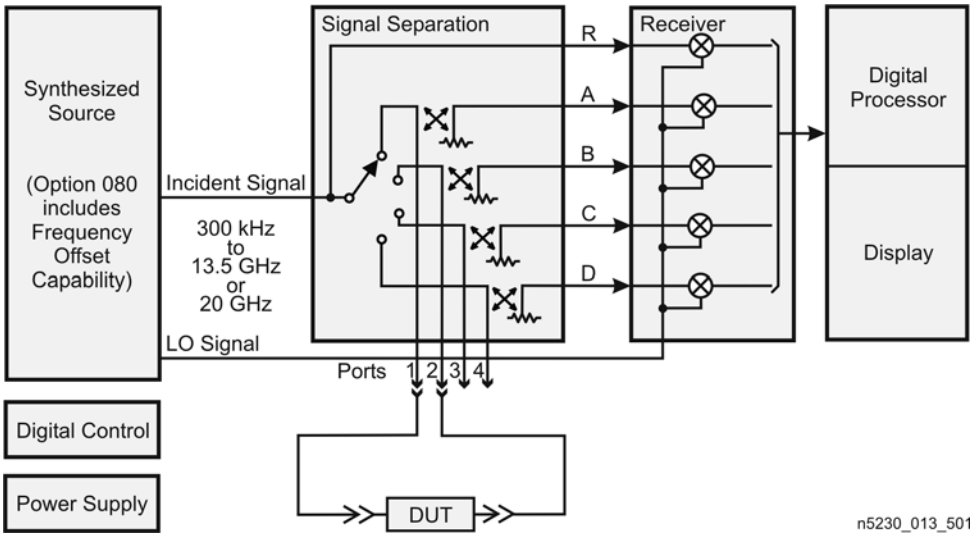

Functional Groups of the Network Analyzer

The operation of the network analyzer can be separated into major functional groups. Each group consists of assemblies that perform a distinct function in the instrument. Some of the assemblies are related to more than one group, and all of the groups, to some extent, are interrelated and affect each other's performance. The major functional groups are:

- Synthesized Source Group
- Signal Separation Group
- Receiver Group
- Digital Processor and Digital Control Group
- Power Supply Group

Synthesized Source Group

The built-in synthesized source generates a swept, stepped, or continuous wave (CW) signal in the frequency ranges as listed in Table 5-1. The source group provides two signals: an LO signal and an incident signal. These two signals are normally at the same frequency (except for a 7.66 MHz offset) except for Option 080, frequency offset mode, where they can be set to different frequencies.

The LO signal is sent directly to the mixers in the receiver group. The incident signal is routed to the front panel test ports and then to the device under test (DUT) as the test signal. A portion of the incident signal is either split or coupled off (in the signal separation group) and sent to the mixers in the receiver group as reference signals. These reference signals are compared (mixed) with the LO signal in the receiver group.

The incident signal output power is leveled by an internal automatic leveling control (ALC) circuit. The maximum output power level of the network analyzer at the test ports is shown in Table 5-1.

Options 146 and 246 add a second source to the synthesized source group. The primary source (source 1) is routed to ports 1 and 2 while the secondary source (source 2) is routed to ports 3 and 4. The source 2 signal path is either functionally the same as or similar to the source 1 signal path. The maximum output power level for an analyzer with Option 146 or 246 is shown in Table 5-1.

Refer to "Synthesized Source Group Operation" on page 5-6.

Table 5-1 Frequency Range and Maximum Output Power Level

Options	Nominal Output Power at Instrument Preset	Maximum Leveled Output Power						
		300 kHz to 10 MHz[a]	10 MHz to 4 GHz	4 GHz to 6 GHz	6 GHz to 10.5 GHz	10.5 GHz to 13.5 GHz	13.5 GHz to 15 GHz	15 GHz to 20 GHz
140, 240[b]	–5 dBm	+5 dBm	+8 dBm	+6 dBm	+3 dBm	0 dBm	0 dBm	–3 dBm
145, 245[b]	–8 dBm	+5 dBm	+8 dBm	+6 dBm	+1 dBm	–2 dBm	–2 dBm	–8 dBm
146, 246[c]	–8 dBm	+5 dBm	+8 dBm	+6 dBm	+1 dBm	–2 dBm	–2 dBm	–8 dBm

a. Values for 300 kHz to 10 MHz are typical.
b. Specifications are for Port 1 only; the values shown are typical characteristics for Ports 2, 3, and 4.
c. Specifications are for Ports 1 and 3 only; the values shown are typical characteristics for Ports 2 and 4.

Signal Separation Group

The incident signal from the source group is separated into a reference path and a test path. The reference signal is transmitted to the receiver group. The test signal is transmitted through—and reflected from—the DUT and is then transmitted to the receiver group.

The signal separation group also provides:

- RF path switching to allow forward and reverse measurements
- external connections for the DUT (Option 014)
- a step attenuator in the source path to reduce power to the DUT (Option 1E1)

Refer to "Signal Separation Group Operation" on page 5-16.

Receiver Group

The receiver converts the test and reference signals to 7.66 MHz intermediate frequency (IF) signals for signal processing, retaining both magnitude and phase characteristics. The IF signals are converted to digital information by the digital processing group.

Options 146 and 246 add a reference channel switch to the output of source 1 and source 2, to switch the reference signal to the reference receiver between the two sources as required for measurements.

Refer to "Receiver Group Operation" on page 5-22.

Digital Processor and Digital Control Group

The digital processor and digital control group are divided into a front panel group and a data acquisition and processing group. The front panel group provides communication to the network analyzer. The data acquisition and processing group provides the output to the display, in addition to signal processing and analyzer control.

Refer to "Digital Processing and Digital Control Group Operation" on page 5-25.

Power Supply Group

The power supply functional group provides power for the other assemblies in the instrument.

Refer to "Power Supply Group Operation" on page 5-30.

Synthesized Source Group Operation

The source group produces a stable output signal by phase locking a synthesized voltage-controlled oscillator (VCO). Refer to Table 5-2 on page 5-8 for the full frequency range of the source. The outputs at the front panel test ports are swept, stepped or CW signals. Maximum leveled output powers are listed in Table 5-1 on page 5-4. For a simple block diagram of the source group, refer to Figure 5-2.

In this section the following are described:

- Basic Operation
- Frequency Offset Operation (Option 080)
- A7, A9, and A13 (Options 146 and 246) Fractional-N Synthesizer Boards
- A6, A8, and A12 (Options 146 and 246) Multiplier Boards
- A19 and A18 (Options 146 and 246) Multiplier/Amplifier/Switch/Splitter 26.5 (MASS 26.5) (MASSQuad)
- A10 Frequency Reference Board (including rear-panel interconnects)
- A16 Test Set Motherboard (including rear-panel interconnects)
- A17 Source 2 ALC and Bias Control (QABC) Board (Options 146 and 246)

Basic Operation

Table 5-2 on page 5-8 lists the L.O. harmonic number, the synthesizer frequencies (A7, A9, and A13), and the main source frequency (A19 and A18) within the analyzer for each band. This table is referred to throughout this chapter and also appears on the overall block diagram at the end of Chapter 4, “Troubleshooting.”

The A10 frequency reference board produces a constant phase locked reference signal of 5 MHz that is sent to the A7, A9, and A13 fractional-N synthesizer boards.

The A7 fractional-N synthesizer board produces an LO signal that is sent through the A6 multiplier to the A20 mixer brick. The frequency is synthesized such that the mixing product of this LO signal with the test signal output is a constant 7.66 MHz when the spur avoidance function is OFF. With the spur avoidance function ON, this IF signal is set to various values between 1 and 12 MHz, at source frequencies below 40 MHz, to avoid generating spurious responses. This IF signal is sent to the A5 SPAM board for digital processing.

The A9 and A13 fractional-N synthesizer boards produce an incident signal that is sent through the A8 or A12 multiplier board and then the A19 or A18 MASSQuad to the front panel outputs. A portion of this signal is either split (R channel) or coupled (A, B, C, D channels) off and sent to the A20 mixer brick where it is mixed with the LO signal from the A6 multiplier board to produce the 7.66 MHz IF signal.

The A7, A9, and A13 fractional-N synthesizer boards each contain their own phase lock circuitry. The A7 board is used to phase lock the LO signal while the A9 and A13 boards are used to phase lock the test signals (the A9 for source 1 and the A13 for source 2). This makes it possible for the LO signal to be tuned to a different frequency than the test signal, which is necessary since the LO signal is normally 7.66 MHz higher than the test signal.

Since the A7, A9, and A13 fractional-N synthesizer boards each receive their 5 MHz input reference signal from the exact same source, their outputs remain in-phase even though they are at different frequencies.

Figure 5-2 Source Group (One Source)

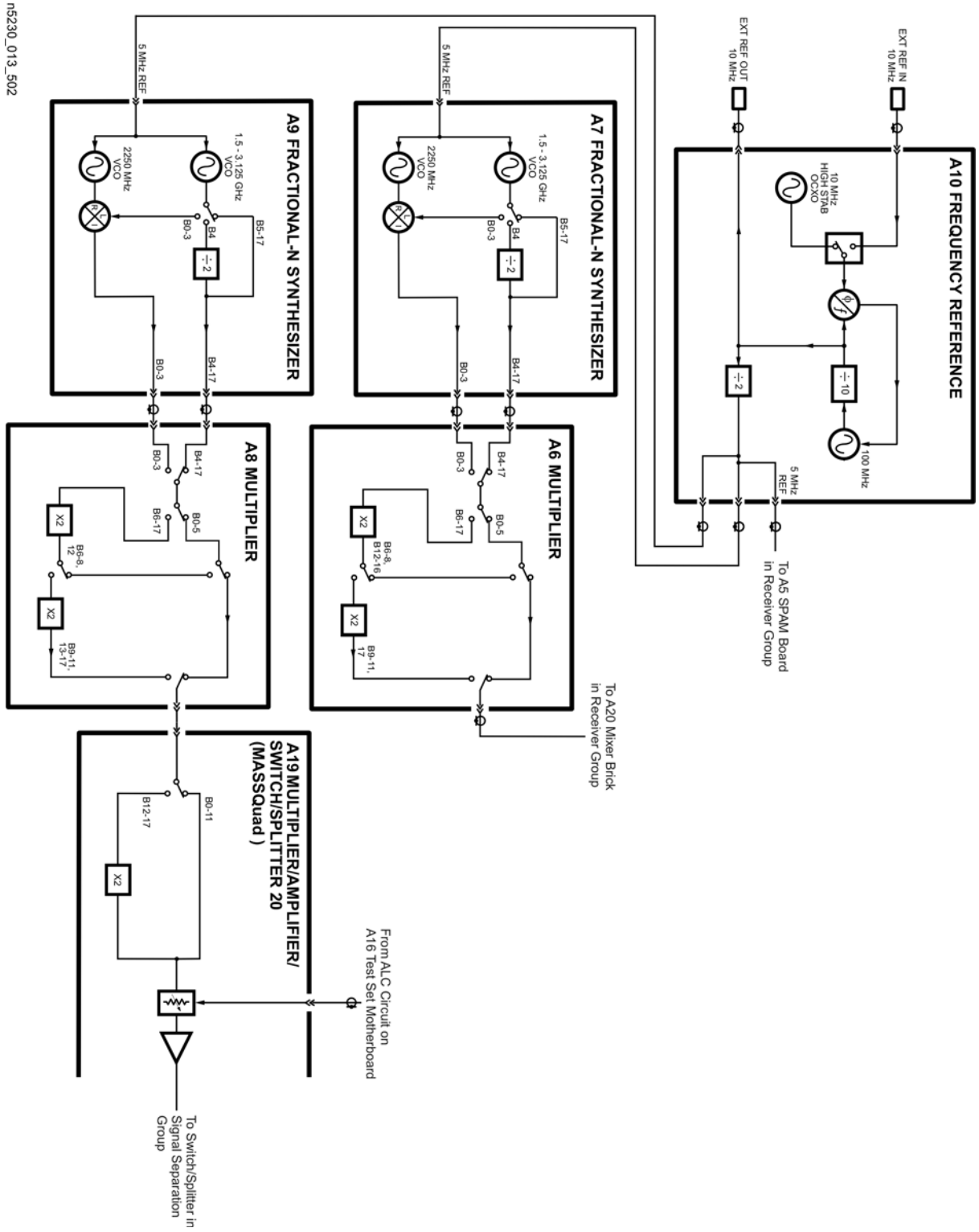

Table 5-2 Subsweep Frequencies

Options	Band	A20 Mixer Brick L.O. Harmonic	A7 Frac-N Synthesizer Frequency (GHz)	A6 Multiplier Frequency (GHz)	A9/A13 Frac-N Synthesizer Frequency (GHz)	A8 Multiplier Frequency (GHz)	A19/A18 MASSQuad Frequency (GHz)
140, 145, 146, 240, 245, or 246	0	1	0.008 to 0.009	0.008 to 0.009	.0003 to 0.001	.0003 to 0.001	.0003 to 0.001
	1	1	0.009 to 0.018	0.009 to 0.018	0.001 to 0.010	0.001 to 0.010	0.001 to 0.010
	2	1	0.018 to 0.048	0.018 to 0.048	0.010 to 0.040	0.010 to 0.040	0.010 to 0.040
	3	1	0.048 to 0.756	0.048 to 0.756	0.040 to 0.748	0.040 to 0.748	0.040 to 0.748
	4	1	0.756 to 1.508	0.756 to 1.508	0.748 to 1.500	0.748 to 1.500	0.748 to 1.500
	5	1	1.508 to 3.133	1.508 to 3.133	1.500 to 3.125	1.500 to 3.125	1.500 to 3.125
	6	1	1.566 to 2.087	3.133 to 4.174	1.563 to 2.083	3.125 to 4.167	3.125 to 4.167
	7	1	2.087 to 2.629	4.174 to 5.258	2.083 to 2.625	4.167 to 5.250	4.167 to 5.250
	8	1	2.629 to 3.129	5.258 to 6.258	2.625 to 3.125	5.250 to 6.250	5.250 to 6.250
	9	1	1.564 to 2.085	6.258 to 8.341	1.563 to 2.083	6.250 to 8.333	6.250 to 8.333
	10	1	2.085 to 2.452	8.341 to 9.808	2.083 to 2.450	8.333 to 9.800	8.333 to 9.800
	11	1	2.452 to 2.627	9.808 to 10.508	2.450 to 2.625	9.800 to 10.500	9.800 to 10.500
	12	3	1.751 to 2.085	3.503 to 4.169	2.625 to 3.125	5.250 to 6.250	10.500 to 12.500
	13*	3	2.085 to 2.251	4.169 to 4.503	1.563 to 1.687	6.250 to 6.750	12.500 to 13.500
240, 245, or 246	13**	3	2.085 to 2.501	4.169 to 5.003	1.563 to 1.875	6.250 to 7.500	12.500 to 15.000
	14	3	2.501 to 2.626	5.003 to 5.253	1.875 to 1.969	7.500 to 7.875	15.000 to 15.750
	15	3	2.626 to 2.779	5.253 to 5.558	1.969 to 2.083	7.875 to 8.333	15.750 to 16.667
	16	3	2.779 to 3.126	5.558 to 6.253	2.083 to 2.344	8.333 to 9.375	16.667 to 18.750
	17	3	1.563 to 1.667	6.253 to 6.669	2.344 to 2.500	9.375 to 10.000	18.750 to 20.000

* Applies to 13.5 GHz analyzers only.
** Applies to 20 GHz analyzers only.

Frequency Offset Operation (Option 080)

Since the A7, A9 and A13 fractional-N synthesizer boards each contain their own phase lock circuitry, they can be phase locked independently to different output frequencies. Normally the LO signal is automatically tuned to a frequency 7.66 MHz higher than that of the test signal to create the 7.66 MHz difference frequency (IF) in the A20 mixer brick.

In frequency offset mode (Option 080), the LO signal can be independently tuned to any frequency (within its tuning range) to allow for frequency offset measurements needed when testing devices such as mixers and converters.

A7, A9, and A13 (Options 146 and 246) Fractional-N Synthesizer Boards

The A7, A9, and A13 fractional-N synthesizer boards use the 5 MHz reference signal from the A10 frequency reference board to tune two VCO circuits: one that sweeps from 1500 to 3125 MHz and one that is set to a CW frequency of 2250 MHz.

In bands 0–3, these signals are mixed to produce the output frequencies listed in Table 5-2. In band 4, the output of the swept VCO is passed through a divide-by-2 circuit to produce the output frequencies listed in Table 5-2. In all other bands, the swept VCO signal is sent directly to the synthesizer output.

At the output, an ALC circuit maintains the power level at –5 dBm for bands 0–3 or 0 dBm for bands 4–17. In all bands, the output is sent to either the A6, A8, or A12 multiplier board.

The output of the A7 fractional-N synthesizer board is 7.66 MHz higher than the output of the A9 and A13 fractional-N synthesizer boards. This is because the output of the A7 fractional-N synthesizer board is routed through the A6 multiplier board to the A20 mixer brick where it is mixed with the test signal to produce a 7.66 MHz IF signal for each of five channels. Refer to “A20 Mixer Brick” on page 5-22 for a more complete description.

A6, A8, and A12 (Options 146 and 246) Multiplier Boards

In bands 0–5, the input signal from the A7 A9, or A13 fractional-N synthesizer board is passed through the multiplier board unchanged. For all other bands, the signals are doubled, filtered, and amplified. In the A6 board, in bands 9–11 and 17, the signals are again doubled, filtered, and amplified. In the A8 and A12 boards, in bands 9– 11 and 13–17, the signals are again doubled, filtered, and amplified. Together these signals create the full output frequency range of 300 kHz to 10.508 GHz for the A6 board or 300 kHz to 10.5 GHz for the A8 and A12 boards.

A19 and A18 (Options 146 and 246) Multiplier/Amplifier/Switch/Splitter 26.5 (MASS 26.5) (MASSQuad)

In bands 0–11, the 300 kHz to 10.5 GHz inputs are filtered, amplified, and passed through the MASSQuad. In bands 12–17, they are doubled, filtered, and amplified.

Together, these signal paths create the full output frequency range of 300 kHz to 20 GHz that is sent to the splitter where a portion of the signal is used for the R channel reference signal and another portion for the ALC circuit on either the A16 test set motherboard (for the A19) or the A17 QABC board (for the A18).

A10 Frequency Reference Board

This assembly provides stable reference frequencies to the rest of the instrument. A high stability 10 MHz oven-controlled crystal oscillator (OCXO) normally provides the frequency standard. However, if a 10 MHz external reference signal is detected at the 10 MHz EXT REF IN port on the rear panel, it is used as the frequency reference instead.

The 10 MHz reference signal is used to phase lock a 100 MHz VCO. The output of this VCO is then divided by ten to produce the 10 MHz EXT REF OUT rear panel signal. This 10 MHz signal is divided by two to produce 5 MHz reference signals for the A5 signal processing ADC module (SPAM) board, the A7 fractional-N synthesizer board, and the A9 fractional-N synthesizer board.

Rear-Panel Interconnects

10 MHz REF. INPUT	A BNC connector that allows an external frequency reference signal to be used to phase lock the analyzer for increased frequency accuracy. The analyzer automatically enables the external frequency reference feature when a signal is connected to this input. When the signal is removed, the analyzer automatically switches back to its internal frequency reference.
10 MHz REF. OUTPUT	A BNC connector that allows a 10 MHz reference signal, produced by the A10 frequency reference board, to be output for use in phase locking external test equipment.

A16 Test Set Motherboard

The A16 test set motherboard serves these functions:

- to act as an interface between the A15 CPU board and the auxiliary rear panel interconnects.
- to provide ALC signals to the A19 MASSQuad.
- to route control signals to the signal separation group. Refer to "Signal Separation Group Operation" on page 5-16 for more information.

Rear Panel Interconnects

The A16 test set motherboard includes the following rear panel interconnects.

TEST SET I/O	A DB-25 female connector that is used to control external test sets. The external test set bus consists of 13 multiplexed address and data lines, three control lines, and an open-collector interrupt line. Pin assignments are listed in Table 5-3 on page 5-12. Up to 16 test sets may be "daisy-chained" on the bus at one time. The Test Set I/O is not compatible with 8753 network analyzer test sets.
HANDLER I/O	A rectangular 36-pin, female connector providing four independent parallel input/output ports, nine control signal lines, one ground, and a power supply line. This connector has Type 2 output pin assignments as listed in Table 5-4 on page 5-13. All signals are TTL-compatible. Data input/output ports consist of two 8-bit output ports (Port A and Port B) and two 4-bit bidirectional ports (Port C and Port D). Connector settings can be changed using SCPI and COM commands. The settings are not accessible from the front panel.
AUX I/O	A DB-25 male connector that provides a variety of both analog and digital input and output signals as described in Table 5-5 on page 5-14.
I/O 1 (TRIG IN)	A BNC connector for input of an external trigger. The analyzer can be triggered by an external device using this input. This is the same signal that appears on AUX I/O pin 19 as described in Table 5-5 on page 5-14.
I/O 2 (TRIG OUT)	A BNC connector for output of a trigger signal. This trigger signal can be used to trigger external devices used in the measurement setup, such as signal generators.

Table 5-3 TEST SET I/O Connector Pin Assignments

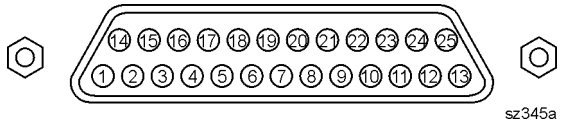

DB-25 Female Connector

Pin Numbers	Name	Function
1	SEL0	TTL out, test set select bit 0, tied to 0 V
2	Sweep Holdoff In	TTL in, low level holds off sweep
3–6	AD12–AD8	TTL I/O, address and latched data
7	GND	0 V, ground reference
8	LAS	TTL out, active low address strobe (1 µs min)
9–11	AD4–AD2	TTL I/O, address and latched data
12	GND	0 V, ground reference
13	Interrupt In	TTL in, low level (10 µs min) aborts sweep
14	+22 V	+22 Vdc, 100 mA max.
15–16	SEL1–2	TTL out, test set select bits 1-2, tied to 0 V
17	AD11	TTL I/O, address and latched data
18	SEL3	TTL out, test set select bit 3, tied to 0 V
19–21	AD7–5	TTL I/O, address and latched data
22–23	AD0–1	TTL I/O, address and latched data
24	LDS	TTL out, active low data strobe (1 µs min)
25	RLW	TTL out, high = read, low = write

Table 5-4 HANDLER I/O Connector Key Pin Assignments

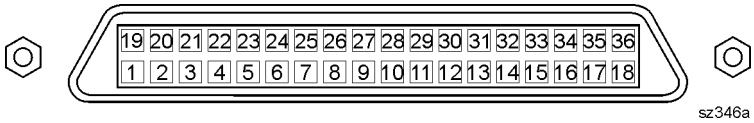

Rectangular 36-Pin Female Connector

Pin Numbers	Name	Function
1	GND	0 V, ground reference
2	INPUT1	TTL in, negative pulse (1 µs min) latches OUTPUT1-2
3–4	OUTPUT1–2	TTL out, latched
5–12	Port A0–7 Out	TTL out, latched
13–20	Port B0–7 Out	TTL out, latched
21–24	Port C I/O	TTL I/O, latched
25–28	Port D I/O	TTL I/O, latched
29	Port C Status	TTL out, low = input mode, high = output mode
30	Port D Status	TTL out, low = input mode, high = output mode
31	Output Strobe Write Strobe	TTL out, active low data write strobe (1 µs min)
32	No connect	Not used
33	Pass Fail	TTL out, latched, indicates pass fail (programmable polarity)
34	+5 V	+5 Vdc, 100 mA max.
35	Sweep End	TTL out, active low (10 µs min) indicates sweep done
36	Pass/Fail Write Strobe	TTL out, active low pass/fail write strobe (1 µs min)

Table 5-5 AUX I/O Connector Pin Assignments

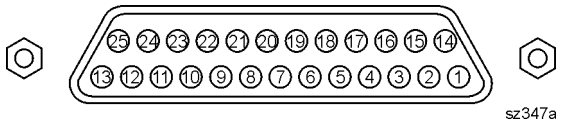

DB-25 Male Connector

Pin Numbers	Name	Function
1	ACOM	0 V, ground reference for analog signals
2–3	Analog Out 2–1	–10 to +10 Vdc output, 10 mA max, Ro = 100 Ω
4	No connect	For future enhancements
5	DCOM	0 V, ground reference for digital signals
6–8	Pulse Out 3–1	TTL out, programmable pulse (for future use)
9	+5 V	+5 Vdc output, 100 mA max.
10	Pass/Fail Write Strobe	TTL out, active low (1 µs min) indicates pass/fail line is valid
11	Sweep End	TTL out, active low (10 µs min) indicates sweep is done
12	Pass/Fail	TTL out, latched, indicates pass or fail (programmable polarity)
13	Output Port Write Strobe	TTL out, active low (10 µs min) writes I/O port data
14	Analog In	–10 to +10 Vdc input, Ri = 100k Ω
15	ACOM	0 V, ground reference for analog signals
16	Power Button In	Open-collector input, active low replicates a power button press
17	DCOM	0 V, ground reference for digital signals
18	Ready for Trigger	TTL out, low indicates ready for external trigger
19	External Trigger In	TTL in, level trigger (width >1 µs), programmable polarity
20	Footswitch In	TTL in, active low (width >1 µs), triggers a programmable event
21	+22 V	+22 Vdc output, 100 mA max.
22–25	In/Out Port C0–3	TTL I/O, general purpose

A17 Source 2 ALC and Bias Control (QABC) Board (Options 146 and 246)

The A17 QABC board serves the following functions:

- Provides ALC and control signals to the A18 source 2 MASSQuad.
- Routes control signals to the A26 source 2 step attenuator.
- Routes control signals to the A29 reference channel switch.
- Provides distribution for the 5 MHz reference signal from the A10 frequency reference board to the A7, A9, and A13 fractional-N synthesizer boards.

Signal Separation Group Operation

The signal separation group divides the source incident signal into a reference path and a test path. Refer to Figure 5-3 on page 5-16.

- The reference signal is transmitted to the receiver group as the R input.
- The test signal is transmitted through—and reflected from—the device under test (DUT) and then is transmitted to the receiver group as the A, B, C, and D inputs.
- Control lines to this group are routed from the A16 test set motherboard.

In this section, the following assemblies are described:

- A19 and A18 (Options 146 and 246) Multiplier/Amplifier/Switch/Splitter 26.5 (MASS 26.5) (MASSQuad)
- A21, A22, A23, and A24 Test Port Couplers
- A25 (Options 145, 245, 146, and 246) and A26 (Options 146 and 246) 60-dB Source Step Attenuator
- Front Panel Jumpers—Configurable Test Set (Options 145, 146, 245, and 246)

Figure 5-3 Standard Test Set Configuration (One Source)

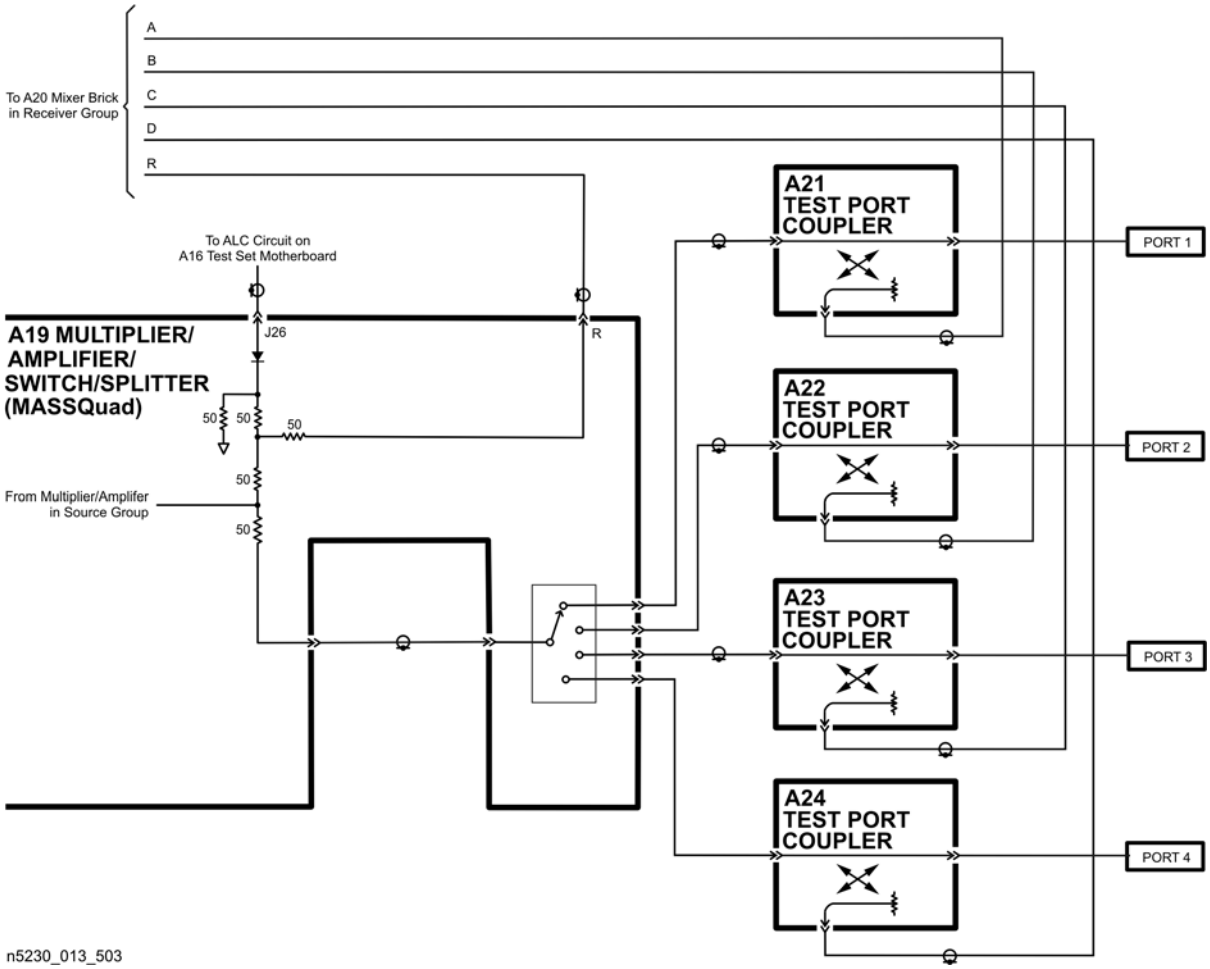

A19 and A18 (Options 146 and 246) Multiplier/Amplifier/Switch/Splitter 26.5 (MASS 26.5) (MASSQuad)

After the source signal has been amplified, filtered, and multiplied, it is sent to the splitter where a portion of the signal is split off to provide the R channel reference signal.

Options 146 and 246 include a reference channel switch (A29), a limiter, and a DC block in the reference channel path to provide the capability to select either source 1 or source 2 as the reference signal. See "A29 Reference Channel Switch, Limiter, and DC Block (Options 146 and 246)" on page 5-22 for additional information.

Another portion of the source signal is split off and sent to the ALC circuitry, (located on the A16 test set motherboard for the A19 and on the A17 QABC board for the A18), to provide leveling control.

The remaining signal is sent to a switch (through a step attenuator for Options 145, 146, 245, and 246) where it is switched to the test port couplers.

- For Options 145 and 245, the signal from the A19 MASSQuad is sent through the A25 source step attenuator back to a switch on the A19 MASSQuad where it is switched to one of the four test port couplers, A21–A24.
- For Options 146 and 246, the signal from the A19 source 1 MASSQuad is sent through the A25 source step attenuator back to a switch on the A19 MASSQuad where it is switched to either the A21 or A22 test port coupler.

  The signal from the A18 source 2 MASSQuad is sent through the A26 source step attenuator back to a switch on the A18 MASSQuad where it switched to either the A23 or A24 test port coupler.

Refer also to "A19 and A18 (Options 146 and 246) Multiplier/Amplifier/Switch/Splitter 26.5 (MASS 26.5) (MASSQuad)" on page 5-9.

A21, A22, A23, and A24 Test Port Couplers

The test port signal goes into the through-line arm of the couplers, and from there to the test ports and the DUT. The coupled arm of the couplers carries the signal reflected from or transmitted through the DUT, to the receiver (through a front panel jumper for Options 146, 146, 245 and 246) for measurement. The coupling coefficient of the directional couplers is nominally 15 dB over the full frequency range.

A25 (Options 145, 245, 146, and 246) and A26 (Options 146 and 246) 60-dB Source Step Attenuator

The 60-dB step attenuator provides coarse power control for the test port signals. It is an electro-mechanical step attenuator that provides 0 to 60 dB of attenuation in 10-dB steps. It adjusts the power level to the DUT without changing the level of the incident power in the reference path. This attenuator is controlled by the A15 CPU board.

Configurable Test Set (Options 145, 146, 245, and 246)

The Option 145, 146, 245, or 246 analyzer allows you to measure devices with higher power and higher dynamic range limits than the standard analyzer. The theory of operation is the same as for the standard analyzer except that there are nine front panel SMA jumpers.

As shown in Figure 5-4 on page 5-19 and in Figure 5-5 on page 5-20, these nine jumpers are installed between the assemblies listed below.

Four jumpers for all options:

- the A21 test port 1 coupler and the A20 mixer brick channel A
- the A22 test port 2 coupler and the A20 mixer brick channel B
- the A23 test port 3 coupler and the A20 mixer brick channel C
- the A24 test port 4 coupler and the A20 mixer brick channel D

Five additional jumpers for Options 145 and 245:

- the A19 MASSQuad and the A21 test port 1 coupler
- the A19 MASSQuad and the A22 test port 2 coupler
- the A19 MASSQuad and the A23 test port 3 coupler
- the A19 MASSQuad and the A24 test port 4 coupler
- the A19 MASSQuad and the A20 mixer brick channel R

Five additional jumpers for Options 146 and 246:

- the A19 MASSQuad and the A21 test port 1 coupler
- the A19 MASSQuad and the A22 test port 2 coupler
- the A18 MASSQuad and the A23 test port 3 coupler
- the A18 MASSQuad and the A24 test port 4 coupler
- the A29 reference channel switch, limiter, and DC block and the A20 mixer brick channel R

Normal Configurable Test Set Configuration

The normal configurable test set configuration (configurable test set and source step attenuator) is shown in Figure 5-4 for Options 145 and 245 and in Figure 5-5 for Options 146 and 246.

Options 146 and 246 add a second source, a second attenuator, and a reference channel switch. The A29 reference channel switch provides the capability to select either source 1 or source 2 as the reference signal. See “A29 Reference Channel Switch, Limiter, and DC Block (Options 146 and 246)” on page 5-22 for additional information.

With this configuration and inclusion of an external amplifier and accessories, you can calibrate the analyzer and test devices at power levels up to +30 dBm. You can make measurements in the forward, reverse or both directions and still achieve these high power levels. For more information on higher power measurements, search for “Option 014” in the embedded help index in the analyzer.

Figure 5-4 Normal Configurable Test Set Configuration (One Source)

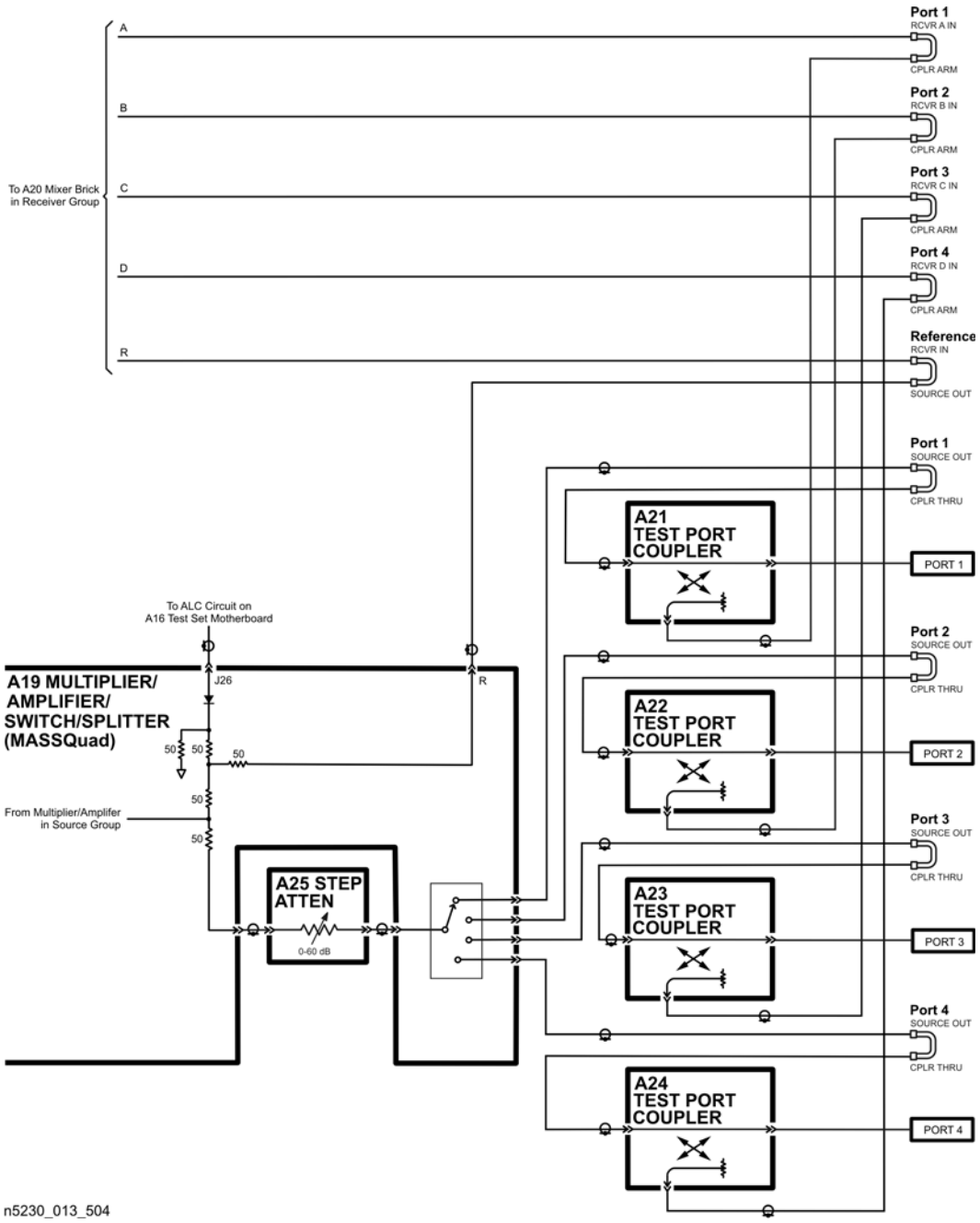

Figure 5-5 Normal Configurable Test Set Configuration (Two Sources)

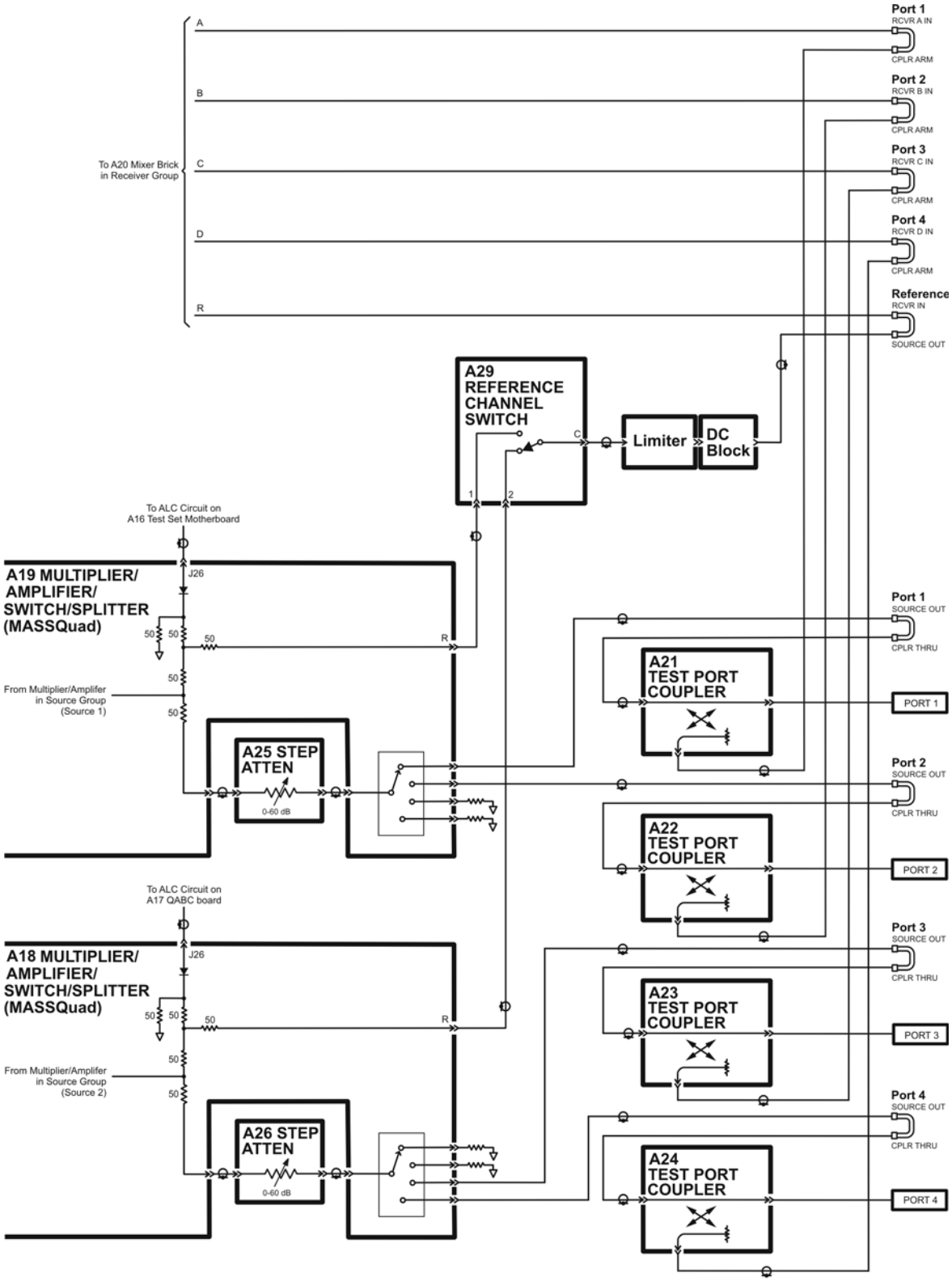

High Dynamic Range Configurable Test Set Configuration

With a few jumper changes, you can configure the configurable test set configuration for higher dynamic range measurements. By swapping the front panel jumpers for one port, signal flow through the corresponding coupler is reversed, increasing the test signal sensitivity by 15 dB.

In the forward direction, as shown in Figure 5-6, the signal flow through the test port 2 coupler (A22) is reversed by arranging the front panel jumpers such that RCVR B IN connects to CPLR THRU and CPLR ARM connects to SOURCE OUT. The configuration of the front panel jumpers is the same for both single source and two source analyzers.

Search for “Option 014” in the embedded help index in the analyzer for more information.

Figure 5-6 High Dynamic Range Configurable Test Set Configuration (One Source)

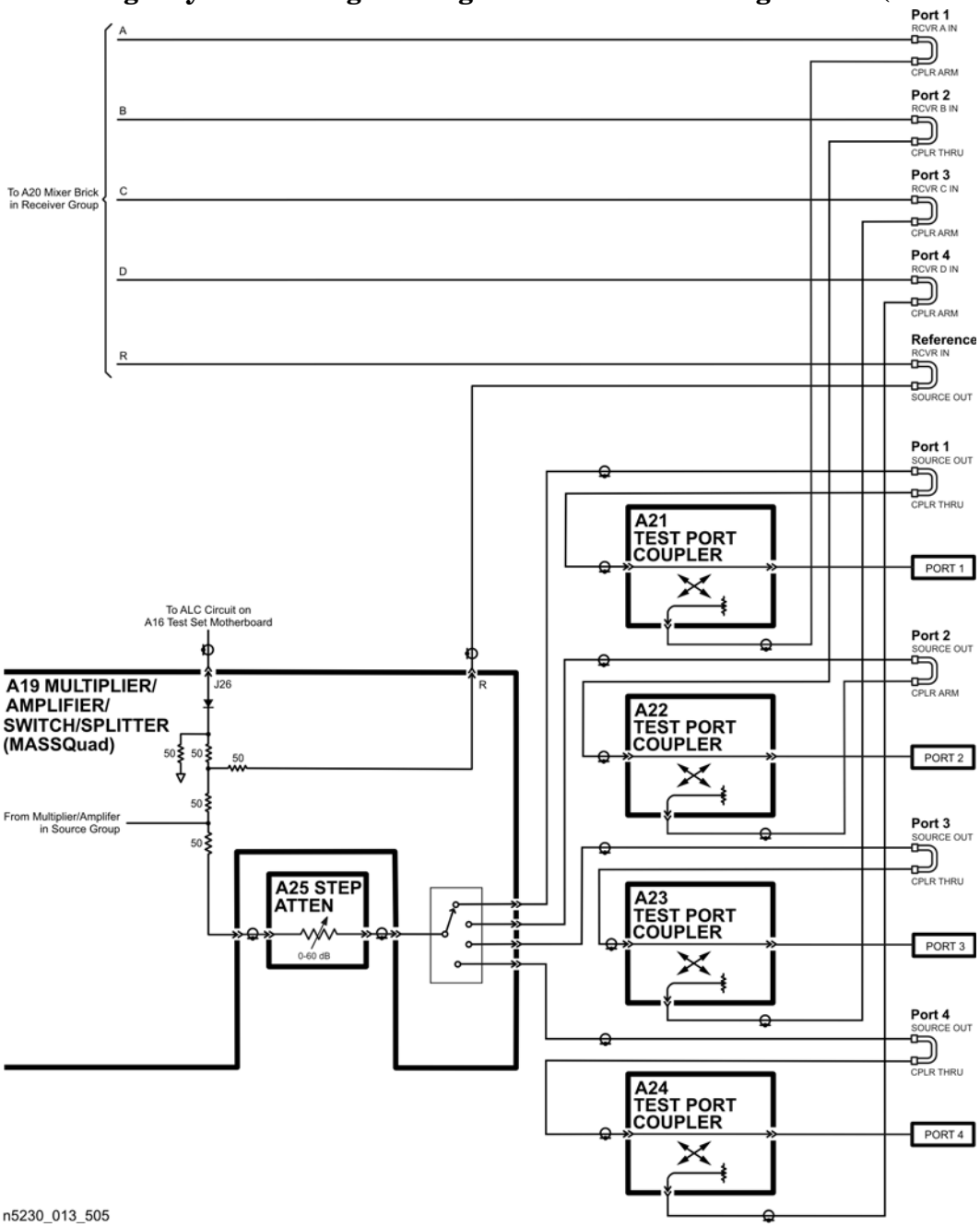

Receiver Group Operation

The receiver group measures and processes the input signals into digital information for processing and eventual display. Figure 5-7 on page 5-23 is a simplified block diagram of the receiver functional group.

In this section the following assemblies are described:

- A20 Mixer Brick
- A5 SPAM Board (Analog Description)
- A29 Reference Channel Switch, Limiter, and DC Block (Options 146 and 246)

A20 Mixer Brick

This assembly contains five identical amplifiers, mixers, and filters. With the spur avoidance function OFF, the test signals (channels A, B, C, and D) and the reference signal (channel R) are mixed with a synthesized source signal that is 7.66 MHz higher than the source incident signal to produce a 7.66 MHz IF signal.

With the spur avoidance function ON, at frequencies below 40 MHz, the IF is set to various values between 1 and 12 MHz to avoid spurious responses that could interfere with the measurement. Because of this, the spur avoidance function should be OFF when troubleshooting the PNA.

The analog IF signal is sent to the A5 SPAM board where it is converted to digital information.

A5 SPAM Board (Analog Description)

The A5 SPAM board contains digital and analog circuitry. For digital descriptions, refer to "A5 SPAM Board (Digital Description)" on page 5-28.

In this assembly, the IF signals from the A, B, C, D, and R mixers go through a gain stage where small signals are amplified to ensure that they can be detected by the analog-to-digital converter (ADC).

All five signals are sampled simultaneously by the ADCs, where they are converted to digital form. The ADC conversions are triggered by timing signals from the digital signal processor (DSP) in response to commands from the central processing unit (CPU). The digitized data is processed into magnitude and phase data by the DSP and sent to the CPU random access memory (RAM) by way of the peripheral component interconnect (PCI) bus.

The processed and formatted data is finally routed to the display, and to the general-purpose interface bus (GPIB) for remote operation. Refer to "Digital Processing and Digital Control Group Operation" on page 5-25 for more information on signal processing.

A29 Reference Channel Switch, Limiter, and DC Block (Options 146 and 246)

In these assemblies, the reference signals from the A19 source 1 MASSQuad and the A18 source 2 MASSQuad are switched into the reference receiver mixer in the A20 mixer brick. See Figure 5-8 on page 5-24. The reference signal comes from the synthesized source, passes through the A29 reference channel switch, goes through the limiter and DC block, through a front-panel jumper, and then to the receiver reference input of the A20 mixer brick.

The limiter and DC block protect the A29 reference channel switch from possible damage caused by signals that may be input into the front-panel Reference SOURCE OUT connector.

Figure 5-7 Receiver Group (One Source)

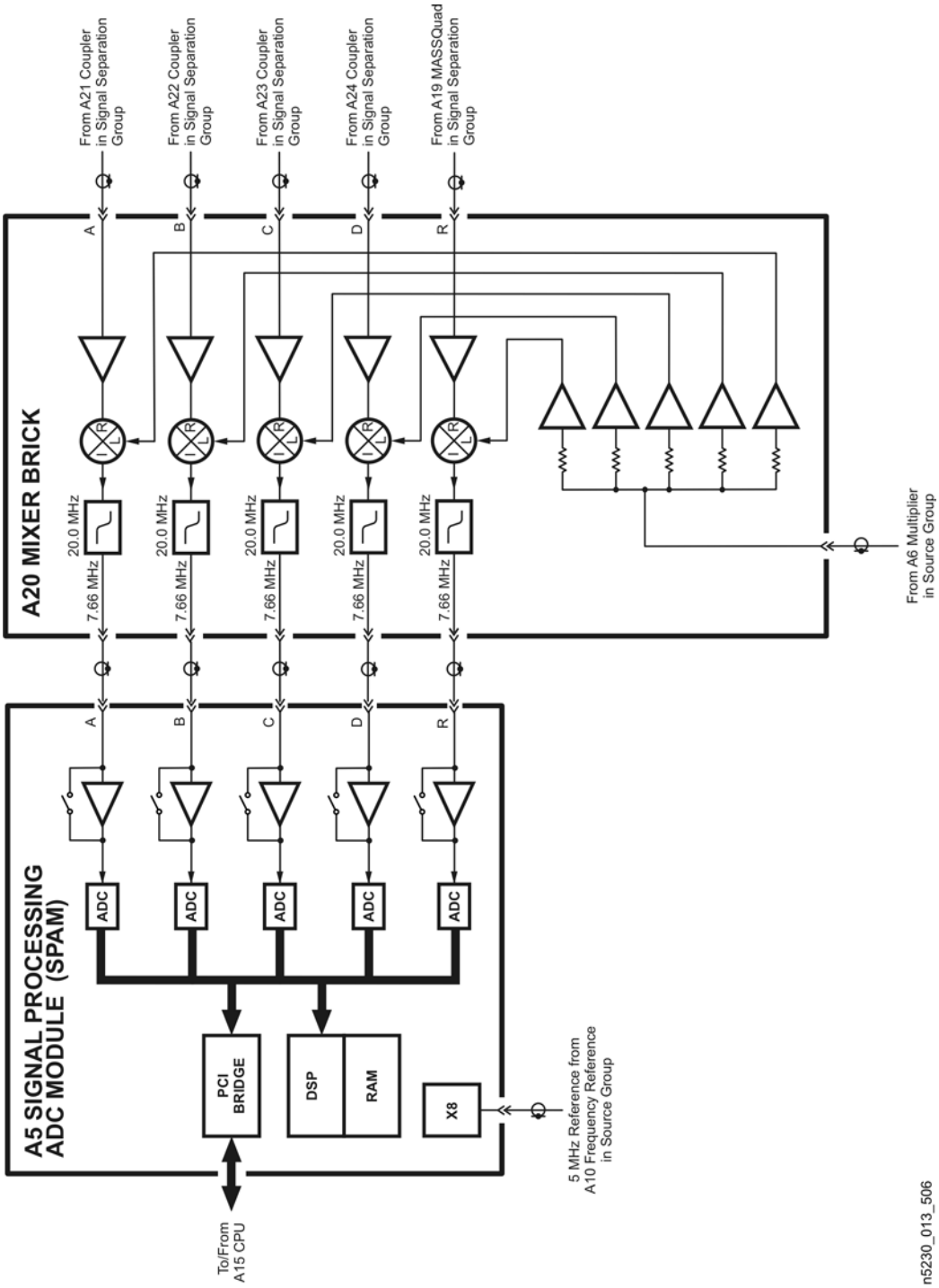

Figure 5-8 Receiver Group (Two Sources)

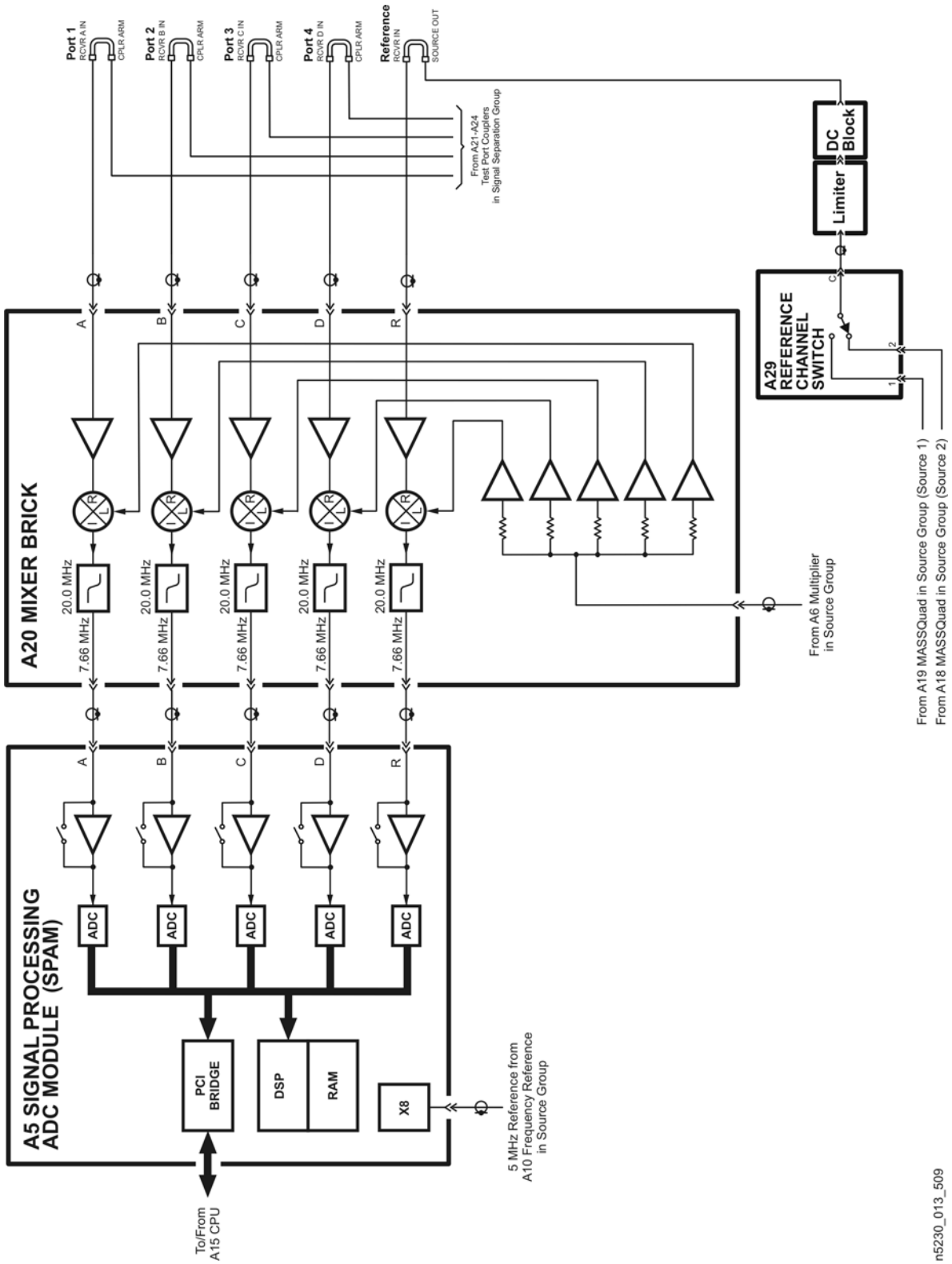

Digital Processing and Digital Control Group Operation

The digital processor and control group provides digital control for the entire analyzer. It provides:

- front panel operation,
- output to the display,
- math processing functions, and
- communications between the analyzer and an external controller or peripherals.

A block diagram of the digital control functional group is shown in Figure 5-9 on page 5-26.

The digital control functional group consists of two subgroups:

- Front Panel Subgroup
  - — A1 Keypad Assembly
  - — A2 Display Assembly
  - — A3 Front Panel Interface Board
  - — A14 system motherboard
  - — A11 vertical motherboard (Options 146 and 246)
- Data Acquisition and Processing Subgroup
  - — A5 SPAM Board (Digital Description)
  - — A15 CPU Board
  - — A40 Floppy Disk Drive
  - — A41 Hard Disk Drive
  - — USB Hub

Figure 5-9 Digital Processing and Digital Control Group

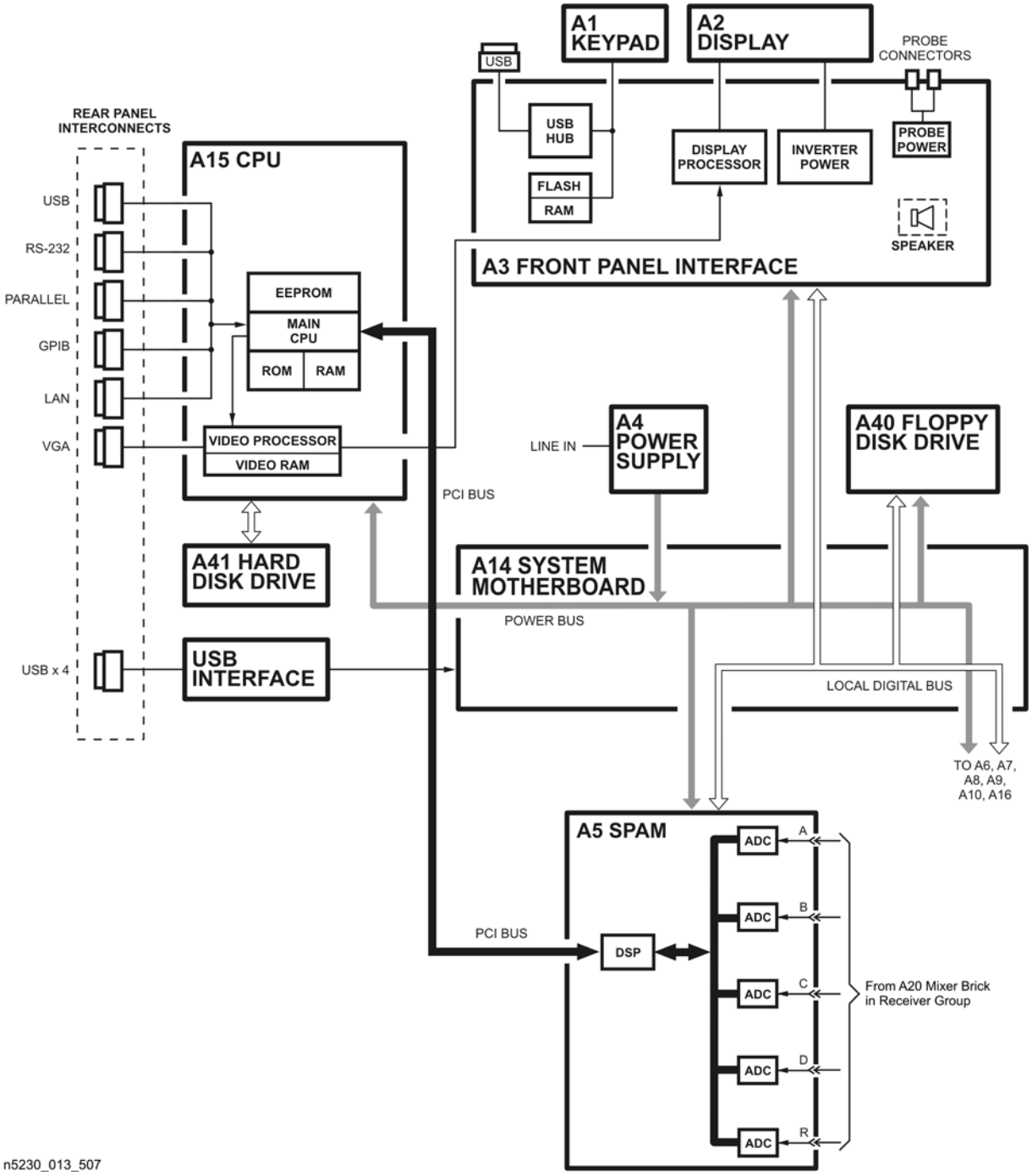

Front Panel Subgroup

The front panel subgroup contains the following assemblies:

- A1 Keypad Assembly
- A2 Display Assembly
- A3 Front Panel Interface Board

A1 Keypad Assembly

The A1 keypad assembly provides user interface to the analyzer. The front panel rotary pulse generator (RPG) knob is not electrically connected to the keypad, but rather provides user inputs directly to the front panel processor.

A2 Display Assembly

The A2 display assembly contains an 8.4 inch LCD with associated drive circuitry and backlight inverter. Two cables between the A2 display assembly and the A3 front panel interface board provide all necessary power and data for normal operation. The two cables are:

1. A cable to the inverter that supplies buffered power.
2. A cable to the display circuitry that supplies decoded data from the video processor on the A15 CPU board and the necessary drive circuit power. The video data received from the A15 CPU board includes the following:
   - digital TTL horizontal sync
   - digital TTL vertical sync
   - digital TTL red video
   - digital TTL green video
   - digital TTL blue video
   - blanking
   - data clock

A3 Front Panel Interface Board

The A3 front panel interface board detects and decodes user inputs from the A1 keypad assembly and front panel knob, and transmits them to the A15 CPU board by way of the A14 system motherboard. It also decodes video data from the video processor on the A15 CPU board and supplies this to the A2 display assembly. Power from the power bus on the A14 system motherboard is buffered and routed to the A1 keypad assembly and the A2 display assembly. All data and power signals are routed through a single cable connector to the A14 system motherboard.

The A3 front panel interface board also includes the following items:

USB	A universal serial bus (USB) jack (an industry standard 4-pin connector).
Probe Power	Two identical connectors (fused inside the instrument) that supply power to an active probe for in-circuit measurements of ac circuits.
Speaker	A speaker that emits the audio signals received from the A15 CPU board.

Data Acquisition and Processing Subgroup

The data acquisition and processing subgroup contain the following assemblies. See Figure 5-9 on page 5-26.

- A5 SPAM Board (Digital Description)
- A15 CPU Board (including rear-panel interconnects)
- A40 Floppy Disk Drive
- A41 Hard Disk Drive
- USB Hub

A5 SPAM Board (Digital Description)

The A5 SPAM board contains digital and analog circuitry. For analog descriptions, refer to "A5 SPAM Board (Analog Description)" on page 5-22.

The digital signal processor (DSP) receives digitized data from the digital circuitry of the A5 SPAM board. It computes discrete Fourier transforms to extract the complex phase and magnitude data from the analog IF signal. The resulting raw data is written into the main random access memory (RAM). The data taking sequence is triggered either externally from the rear panel or by firmware on the A15 CPU board.

A15 CPU Board

The A15 CPU board contains the circuitry to control the operation of the analyzer. Some of the components include the central processing unit (CPU), memory (EEPROM, ROM, RAM), bus lines to other board assemblies, and connections to the rear panel. Some of the main components are described next:

- CPU
- Main RAM
- Rear Panel Interconnects

CPU The central processing unit (CPU) is a microprocessor that maintains digital control over the entire instrument through the instrument bus. The CPU receives external control information from the keypad, any USB device, LAN or GPIB, and performs processing and formatting operations on the raw data in the main RAM. It controls the DSP, the video processor, and the interconnect port interfaces. In addition, when the analyzer is in the system controller mode, the CPU controls peripheral devices through the peripheral port interfaces.

Front panel settings are stored in SRAM, with a battery providing at least five years of backup storage when external power is off.

Main RAM The main random access memory (RAM) is shared memory for the CPU and the DSP. It stores the raw data received from the DSP while additional calculations are performed on it by the CPU. The CPU reads the resulting formatted data from the main RAM, converts it to a user-definable display format, and writes this to the video processor for display.

Rear Panel Interconnects The rear panel includes the following interfaces:

USB	A universal serial bus (USB) jack (an industry standard 4-pin connector).
GPIB	A 24-pin, female, type D-24 connector that meets IEEE-488 standards.
Serial	A 9-pin, male, RS-232 compatible, D-sub connector.
Parallel	A 36-pin, mini-D, 1284-C connector that provides connection to printers or any other parallel port peripheral.
LAN	A standard 8-pin, 10/100BaseT, Ethernet connection. It auto selects between the two data rates.
Display (VGA)	A 15-pin, female, D-sub connector that provides a video output of the analyzer display that can be viewed on an external VGA monitor.

A40 Floppy Disk Drive

The A40 floppy disk drive allows you to store and recall instrument states and measurement results on a 3.5 inch, 1.44 MB floppy disk. This assembly is connected directly to the A14 system motherboard.

A41 Hard Disk Drive

The hard disk drive assembly (HDDA) is an integrated development environment (IDE) data storage device which is connected directly to the A15 CPU board. The full operating system and firmware for the network analyzer is stored on the A41 hard disk drive.

USB Hub

The rear-panel mounted, internal USB hub provides four additional USB ports for connection of external USB compatible devices.

Power Supply Group Operation

The A4 power supply assembly is a switching power supply operating at 103 kHz switching frequency. The input power ranges for the power supply are 90 to 132 Vac or 195 to 250 Vac. The power supply automatically senses the input voltage and switches between these two ranges.

The dc output voltages are:

- +5.2 V
- –5.2 V
- +9 V
- +15 V
- +15 V standby (always on)
- –15 V
- +22 V
- VCC (5.2 V for the A15 CPU board)
- VDL (3.3 V to the A15 CPU board)

The +15 V standby line remains on continuously whenever the power supply is plugged in. This line is used to provide power to front panel LEDs and CPU components when the analyzer is turned off.

An additional +32 V supply line is generated on the A14 system motherboard from the +22 V supply line.

NOTE If the power supply senses an over-voltage or over-current condition on any of the supply lines, the power supply will cycle on and off at a low voltage level (burp mode).

6 Replaceable Parts

Information in This Chapter

This chapter:

- identifies the replaceable parts for the Agilent PNA series microwave network analyzer.
- includes several tables and illustrations to assist you in identifying the correct part for your analyzer.
- contains ordering information for new assemblies and rebuilt-exchange assemblies.

Chapter Six at-a-Glance

Section Title	Summary of Content	Start Page
Ordering Information	How to order a replaceable part from Agilent Technologies.	Page 6-3
Assembly Replacement Sequence	The correct sequence for replacing a defective assembly.	Page 6-4
Rebuilt-Exchange Assemblies	The definition of a rebuilt-exchange assembly. The procedure for replacing and returning a defective assembly to Agilent Technologies.	Page 6-5
Replaceable Parts Listings	A table that provides the location of the assemblies in your analyzer by reference designator.	Page 6-6
	A table that provides the location of the replaceable parts in your analyzer by type of part: • Assemblies (front panel, top, and bottom) • Cables (top and bottom) • Hardware (internal, hard disk drive, rear panel, and external) • Miscellaneous replaceable parts	Page 6-7

Ordering Information

To order a part listed in the replaceable parts lists:

- include the part number
- indicate the quantity required
- Contact Agilent Technologies for instructions on where to send the order. Refer to "Contacting Agilent" on page 2-11.

To order a part that is not listed in the replaceable parts lists:

- include the instrument model number and complete instrument serial number
- include the description and function of the part
- indicate the quantity required
- Contact Agilent Technologies for instructions on where to send the order. Refer to "Contacting Agilent" on page 2-11.

Assembly Replacement Sequence

The following steps describe how to replace an assembly in the network analyzer.

Step 1. Identify the faulty group. Begin with Chapter 4, "Troubleshooting." Follow up with the appropriate troubleshooting chapter that identifies the faulty assembly.

Step 2. Order a replacement assembly. Refer to this chapter.

Step 3. Replace the faulty assembly and determine what adjustments are necessary. Refer to Chapter 7, "Repair and Replacement Procedures."

Step 4. Perform the necessary adjustments. Refer to Chapter 3, "Tests and Adjustments."

Step 5. Perform the necessary performance tests. Refer to Chapter 3, "Tests and Adjustments."

Rebuilt-Exchange Assemblies

Under the rebuilt-exchange assembly program:

- Certain factory-repaired and tested assemblies are available on a trade-in basis.
- Exchange assemblies are offered for lower cost than a new assembly, but meet all factory specifications required of a new assembly.
- The defective assembly must be returned for credit under the terms of the rebuilt-exchange assembly program.
- Spare assembly stock desired should be ordered using the new assembly part number.

Figure 6-1 Module Exchange Procedure

The module exchange program described here is a fast, efficient, economical method of keeping your instrument in service.

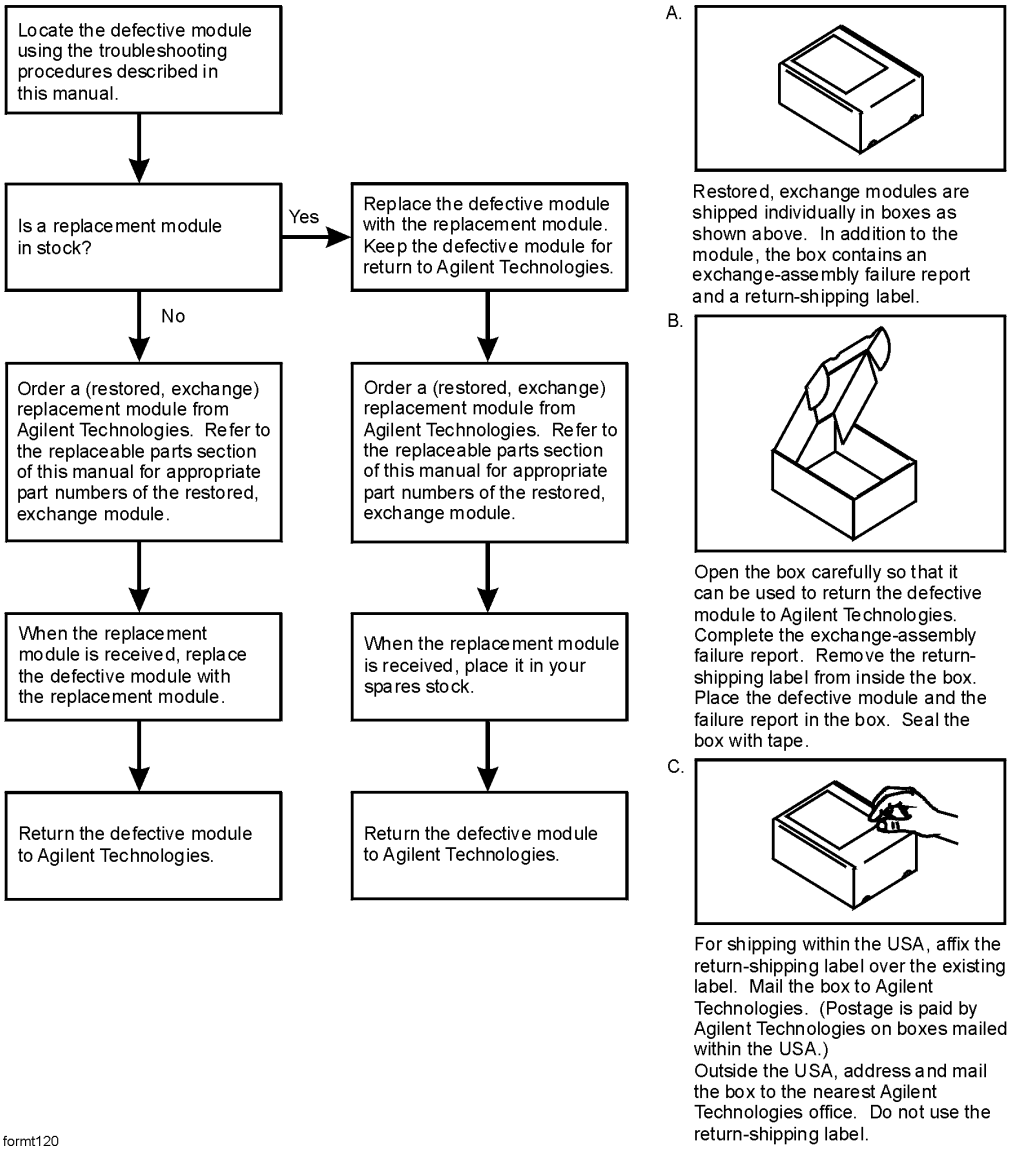

Replaceable Parts Listings

This section contains the replacement part numbers and their descriptions for your Agilent microwave PNA. You can find the locations of replaceable parts in this section:

- listed by reference designator in Table 6-1, or
- listed by the type of part in Table 6-2.

Table 6-1 Part Number Location by Reference Designator

Reference Designator	Description	Location
A1 A2 A3	Keypad assembly Display assembly Front panel interface board	"Front Panel Assembly, All Options" on page 6-8
A4 A5 A6 A7 A8 A9 A10	Power supply assembly Signal processing ADC module (SPAM) board Multiplier board Fractional-N synthesizer board Multiplier board Fractional-N synthesizer board Frequency reference board	"Top Assemblies, All Options Except 146/246" on page 6-10 "Top Assemblies, Options 146/246" on page 6-14
A11 A12 A13	Vertical motherboard (Options 146/246) Multiplier board (Options 146/246) Fractional-N synthesizer board (Options 146/246)	"Top Assemblies, Options 146/246" on page 6-14
A14 A15	System motherboard CPU board	"Top Assemblies, All Options Except 146/246" on page 6-10 "Top Assemblies, Options 146/246" on page 6-14
A16	Test set motherboard	"Bottom Assemblies, Options 140 and 240" on page 6-20 "Bottom Assemblies, Options 145 and 245" on page 6-24 "Bottom Assemblies, Options 146 and 246" on page 6-28
A17 A18	QABC board (Options 146/246) MASSQuad 26.5—on A17 QABC board (Options 146246)	"Top Assemblies, Options 146/246" on page 6-14
A19 A20 A21 A22 A23 A24	MASSQuad 26.5 Mixer brick Test port 1 coupler Test port 2 coupler Test port 3 coupler Test port 4 coupler	"Bottom Assemblies, Options 140 and 240" on page 6-20 "Bottom Assemblies, Options 145 and 245" on page 6-24 "Bottom Assemblies, Options 146 and 246" on page 6-28
A25	Source 60-dB step attenuator (Options 145/146/245/246)	"Bottom Assemblies, Options 145 and 245" on page 6-24 "Bottom Assemblies, Options 146 and 246" on page 6-28
A26	Step attenuator—on A17 QABC board (Options 146/246)	"Top Assemblies, Options 146/246" on page 6-14
A29	Reference switch—with wiring harness (Options 146246)	"Bottom Assemblies, Options 146 and 246" on page 6-28
A40	Floppy disk drive	"Internal Hardware and Miscellaneous Parts, All Options" on page 6-36
A41	Hard disk drive assembly	"Hard Disk Drive Assembly, All Options" on page 6-42

Table 6-2 Part Number Location by Type of Part

Type of Part	Location
Assemblies	• "Front Panel Assembly, All Options" on page 6-8 • "Top Assemblies, All Options Except 146/246" on page 6-10 • "Top Assemblies, Options 146/246" on page 6-14 • "Bottom Assemblies, Options 140 and 240" on page 6-20 • "Bottom Assemblies, Options 145 and 245" on page 6-24 • "Bottom Assemblies, Options 146 and 246" on page 6-28 • "Hard Disk Drive Assembly, All Options" on page 6-42 • "Rear Panel Assembly, All Options" on page 6-40
Cables	• "Top Cables, All Options Except 146/246" on page 6-12 • "Top Cables, Options 146/246 (Top View)" on page 6-16 • "Top Cables, Options 146/246 (Side View)" on page 6-18 • "Bottom Cables, Options 140 and 240" on page 6-22 • "Bottom Cables, Options 145 and 245" on page 6-26 • "Bottom Cables, Options 146 and 246" on page 6-30
Hardware	• "Top Hardware and Miscellaneous Parts, All Options" on page 6-32 • "Bottom Hardware and Miscellaneous Parts, All Options" on page 6-34 • "Internal Hardware and Miscellaneous Parts, All Options" on page 6-36 • "External Hardware and Miscellaneous Parts, All Options" on page 6-38 • "Hard Disk Drive Assembly, All Options" on page 6-42 • "Rear Panel Assembly, All Options" on page 6-40
Miscellaneous	• Service Tools on page 6-44 • Documentation on page 6-44 • Protective Caps for Connectors on page 6-44 • GPIB Cables/GPIB Adapter on page 6-44 • Fuses on page 6-44 • ESD Supplies on page 6-45 • EMI/RFI Shielding Accessories on page 6-45 • Memory Modules on page 6-45 • Upgrade Kits on page 6-45 • Touch-up Paint on page 6-46 • USB Accessories on page 6-45 • Rack Mount Kits and Handle Kits on page 6-45

Front Panel Assembly, All Options

Reference Designator	Part Number	Qty	Description
A1	E8356-60001	1	Keypad assembly
A2[a]	E8356-60002	1	Display assembly
	0950-3379	1	Inverter board (included in A2[b])
	2090-0386	1	Display lamp for LCD (included in A2[b])
	1000-1161	1	Display glass (included in A2[b])
A3	E8361-60061	1	Front panel interface board
RPG	E8356-40006	1	Front knob
①	5041-9183	2	Front handle side trim (for analyzers with handles)
	5041-9174	2	Trim strip, filler (for analyzers without handles)
②[c]	5063-9205	2	Front handle
③	N5230-80006	1	Front panel overlay (all standard test set analyzers)
	N5230-80007	1	Front panel overlay (all configurable test set analyzers)
④	N5230-8000x	1	Nameplate, 4-port, 13.5 GHz (all 13.5 GHz analyzers)
	N5230-80001		Nameplate, 4-port, 20 GHz (all 20 GHz analyzers)
⑤[d]	N5230-60017	1	Front frame assembly
⑥	0515-0375	4	Machine screw, M3.0 x 14 pan head
⑦	0515-0372	10	Machine screw, M3.0 x 8 pan head
⑧	E8364-00020	1	Display cable retaining bracket

a. When ordering a replacement A2 display assembly, you must also order item ④.

b. Although included in the A2 display assembly, each of these parts is also available separately. If one of these parts should have to be replaced, it is not necessary to replace the entire A2 display assembly. For any other parts failures within the display, replace the entire A2 display assembly.

c. For part numbers of complete rack mount kits and handle kits, refer to "Rack Mount Kits and Handle Kits" on page 6-45.

d. When ordering a replacement front frame assembly, you must also order item ③.

Figure 6-2 Front Panel Assembly, All Options

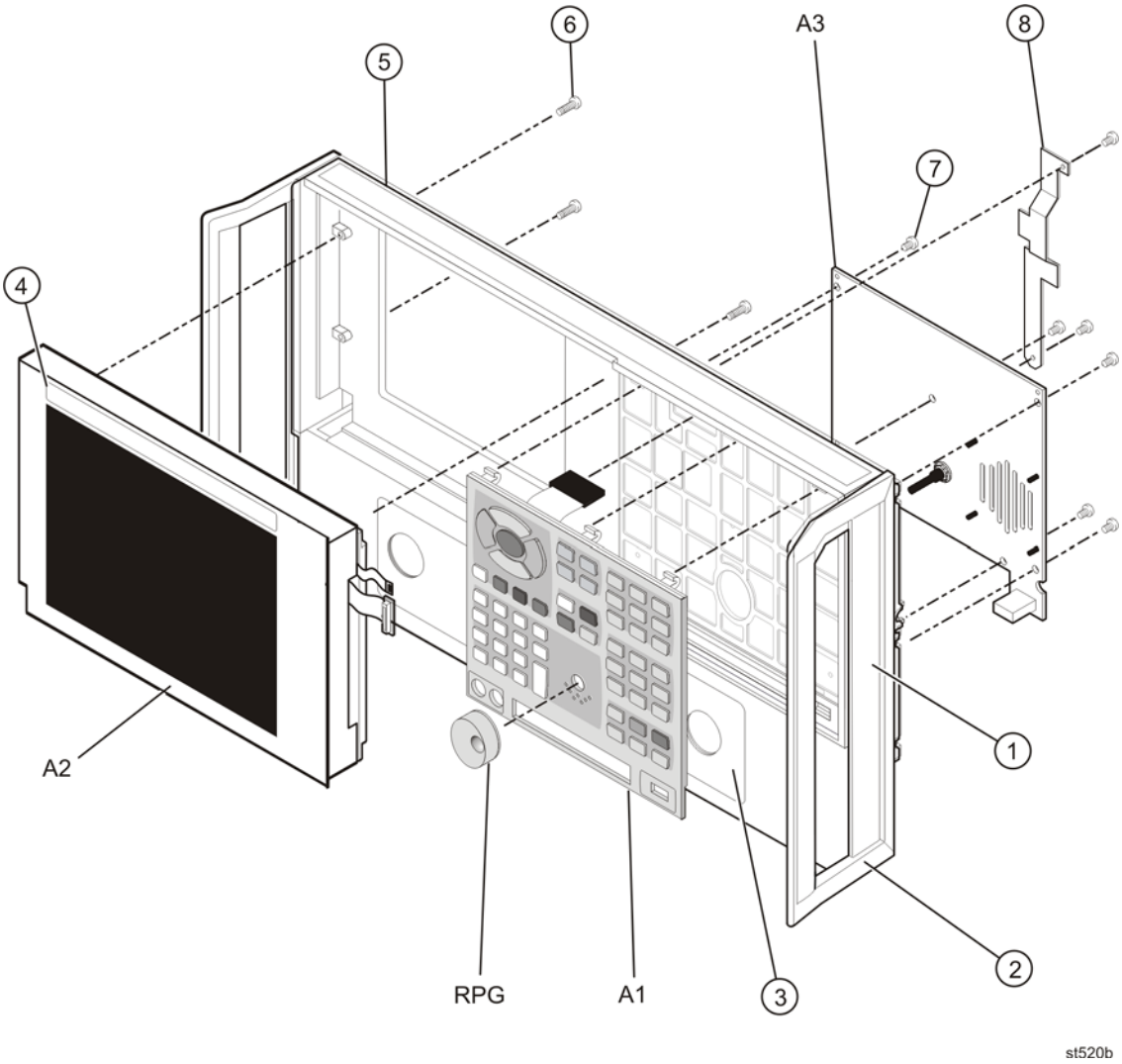

Top Assemblies, All Options Except 146/246

Reference Designator	Part Number	Qty	Description
A4	0950-4599	1	Power supply assembly
A5	E8364-60187	1	Signal processing ADC module (SPAM) board
A6, A8	E8364-60182	2	Multiplier board
A7, A9	E8364-60189	2	Fractional-N synthesizer board
A10	E8364-60136	1	Frequency reference board
A14	N5230-60086	1	System motherboard
A15	E8364-60026	1	CPU board, 1.1 GHz, 1 GB RAM[a]
A40	Floppy disk drive		Refer to "Internal Hardware and Miscellaneous Parts, All Options" on page 6-36.
B1	Fans		

a. If the 1.1 GHz CPU board is a replacement for the 500 MHz CPU board, the hard disk drive (HDD) must be replaced using the N8981A HDD kit. Refer to "Hard Disk Drive Assembly, All Options" on page 6-42 for the part number of the HDD kit.

Figure 6-3 Top Assemblies, All Options Except 146/246

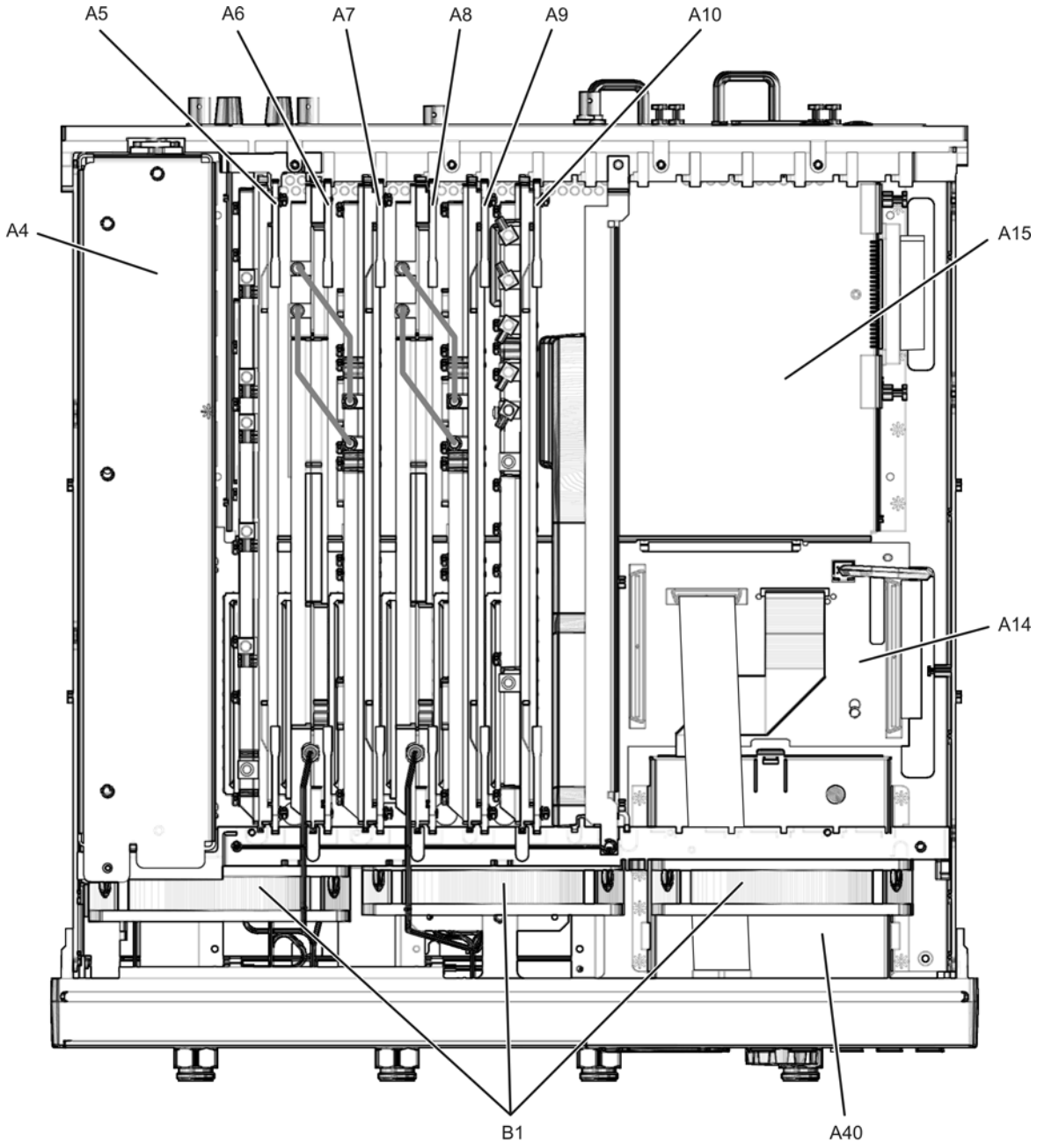

n5230_013_601

Top Cables, All Options Except 146/246

Reference Designator	Type[a]	Part Number	Qty	Description
W1	SR	N5230-20041	2	A7 fractional-N synthesizer board J106 to A6 multiplier board J100
W2				A7 fractional-N synthesizer board J101 to A6 multiplier board J101
W3	SR	N5230-20051	1	A6 multiplier board to A20 mixer brick
W4	SR	N5230-20041	2	A9 fractional-N synthesizer board J106 to A8 multiplier board J100
W5				A9 fractional-N synthesizer board J101 to A8 multiplier board J101
W6	SR	N5230-20077	1	A8 multiplier board to A19 MASSQuad
W21	F	N5230-60016	1	A20 mixer brick (A) to A5 SPAM board J1
W22	F	N5230-60019	1	A20 mixer brick (B) to A5 SPAM board J2
W23	F	N5230-60020	1	A20 mixer brick (C) to A5 SPAM board J4
W24	F	N5230-60021	1	A20 mixer brick (D) to A5 SPAM board J5
W25	F	N5230-60022	1	A20 mixer brick (R) to A5 SPAM board J6
W26	F	8120-5055	2	Rear-panel 10 MHz REF. IN to A10 frequency reference board J2
W27				A10 frequency reference board J3 to rear-panel 10 MHz REF. OUT
W28	F	N5230-60024	1	A10 frequency reference board J10 to A5 SPAM board J3
W29	F	N5230-60010	1	A10 frequency reference board J12 to A7 fractional-N synthesizer board J105
W30	F	N5230-60011	1	A10 frequency reference board J11 to A9 fractional-N synthesizer board J105
①	40R	8121-0116	1	A3 front panel interface board J7 to A14 system motherboard J1
②	100R	8121-0118	1	A14 system motherboard to A16 test set motherboard
③	26R	8121-0120	1	A40 floppy disk drive to A14 system motherboard J2
④	50R	8121-0817	1	A41 hard disk drive assembly to A15 CPU board

a. SR = semirigid coaxial cable; F = flexible coaxial cable; nR = n wires in a ribbon (flat) cable; nW = n wires in a wrapped cable

Figure 6-4 Top Cables, All Options Except 146/246

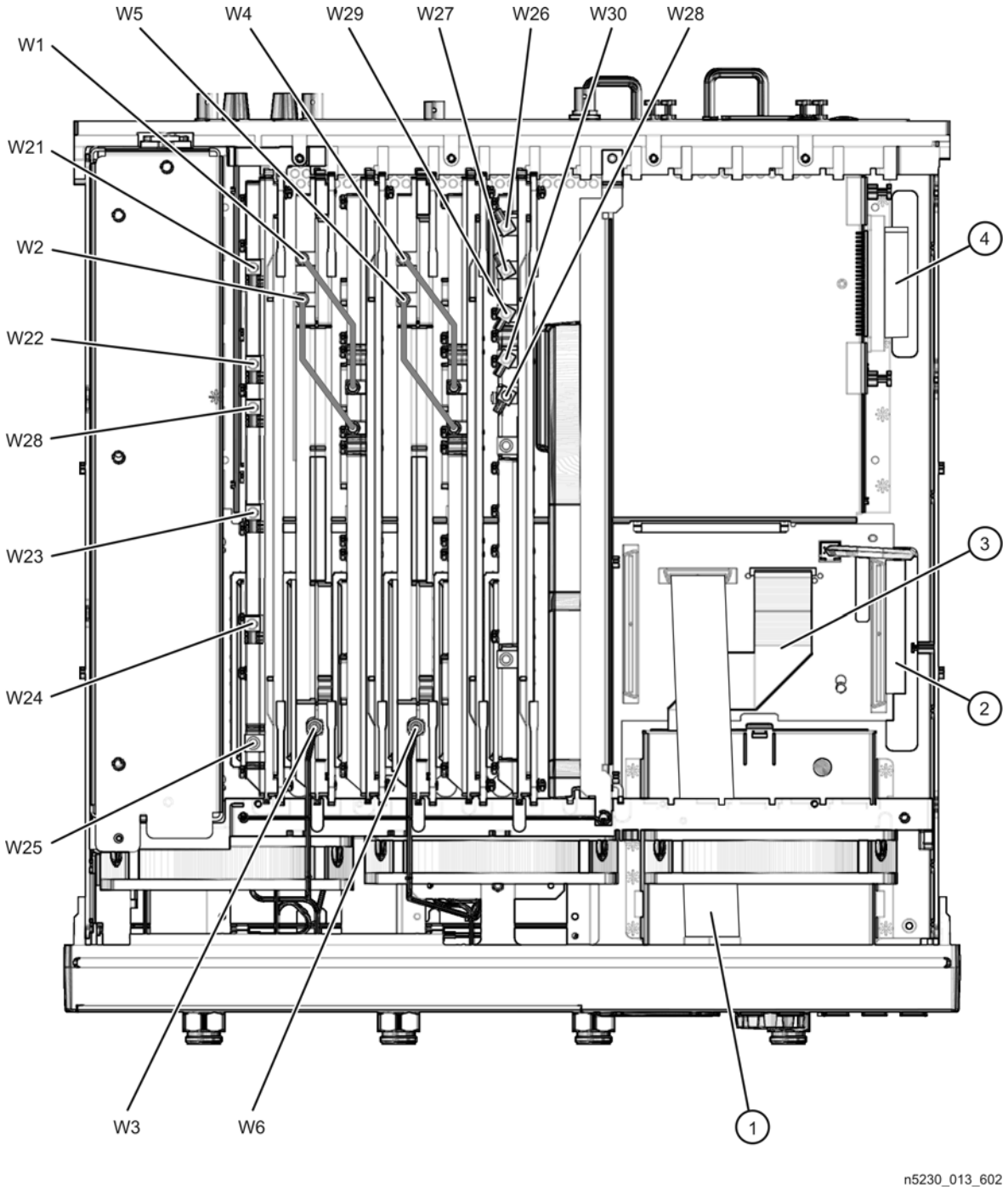

Top Assemblies, Options 146/246

Reference Designator	Part Number	Qty	Description
A4	0950-4599	1	Power supply assembly
A5	E8364-60187	1	Signal processing ADC module (SPAM) board
A6, A8	E8364-60182	2	Multiplier board
A7, A9	E8364-60189	2	Fractional-N synthesizer board
A10	E8364-60136	1	Frequency reference board
A11	N5230-60084	1	Vertical motherboard
A12	N5230-60098	1	Multiplier board
A13	N5230-60097	1	Fractional-N synthesizer board
A14	N5230-60086	1	System motherboard
A15	E8364-60026	1	CPU board, 1.1 GHz, 1 GB RAM[a]
A17	N5230-60085	1	QABC board
A18	5087-7294	1	MASS 26.5 (MASSQuad) (mounted on A17 QABC board)
A26	33321-60065	1	60-dB source step attenuator (mounted on A17 QABC board)
A40	Floppy disk drive		Refer to "Internal Hardware and Miscellaneous Parts, All Options" on page 6-36.
B1	Fans		

a. If the 1.1 GHz CPU board is a replacement for the 500 MHz CPU board, the hard disk drive (HDD) must be replaced using the N8981A HDD kit. Refer to "Hard Disk Drive Assembly, All Options" on page 6-42 for the part number of the HDD kit.

Figure 6-5 Top Assemblies, Options 146/246 (Side View)

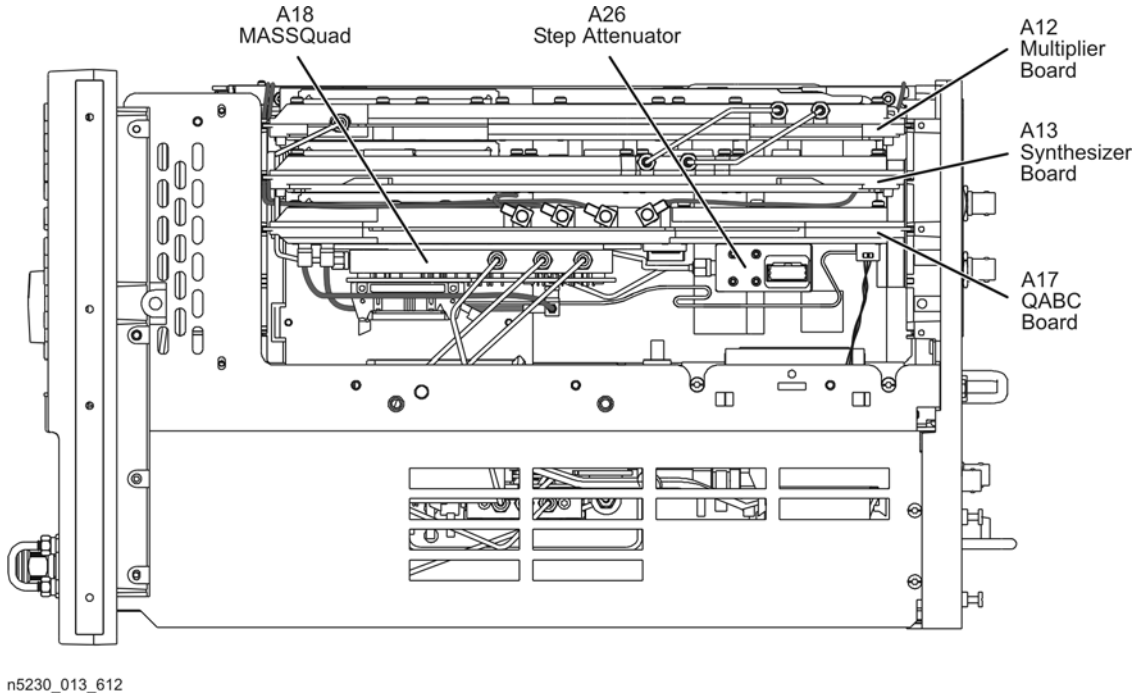

Figure 6-6 Top Assemblies, Options 146/246 (Top View)

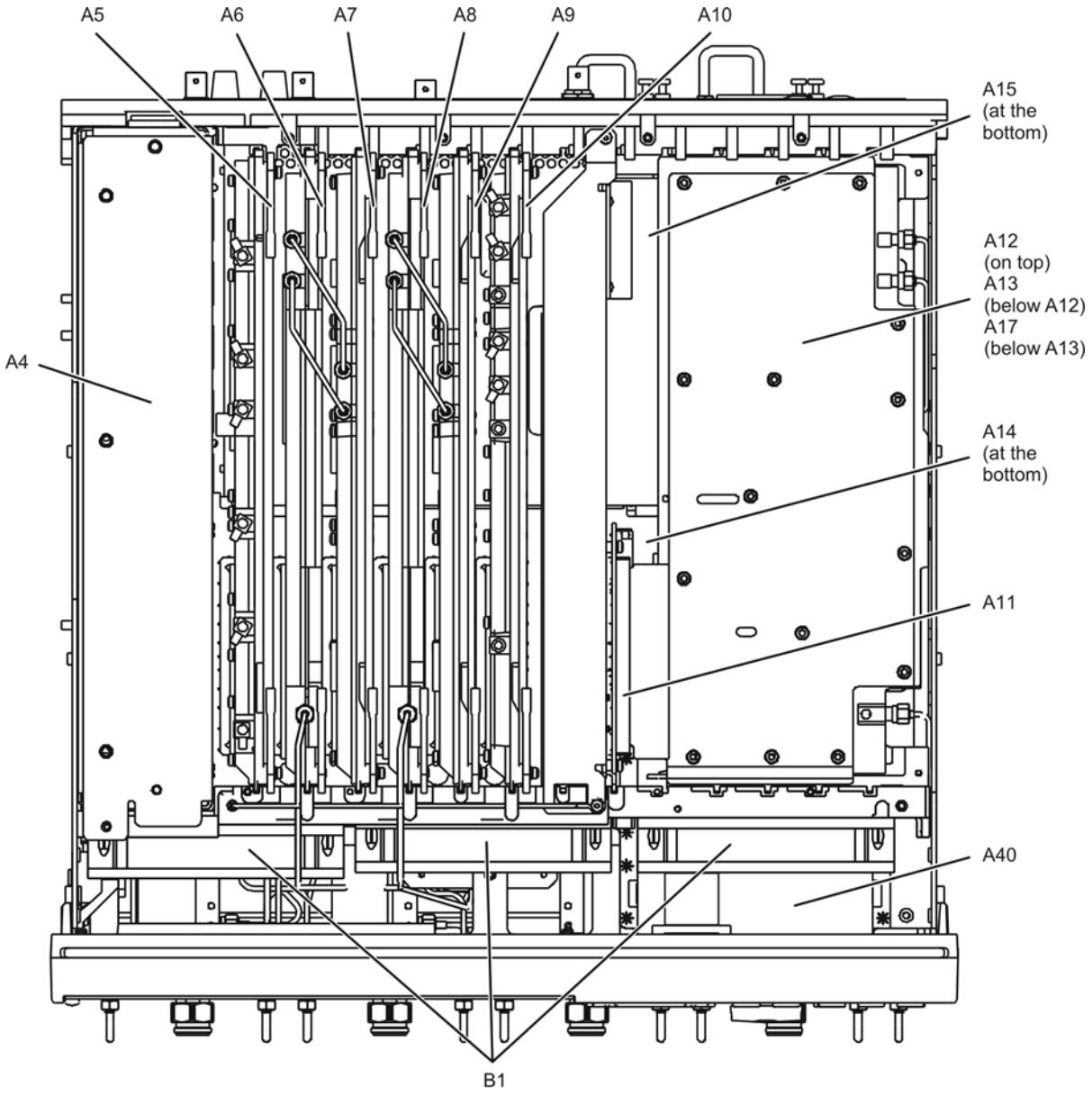

Top Cables, Options 146/246 (Top View)

Reference Designator	Type[a]	Part Number	Qty	Description
W1	SR	N5230-20041	2	A7 fractional-N synthesizer board J106 to A6 multiplier board J100
W2				A7 fractional-N synthesizer board J101 to A6 multiplier board J101
W3	SR	N5230-20051	1	A6 multiplier board to A20 mixer brick
W4	SR	N5230-20041	2	A9 fractional-N synthesizer board J106 to A8 multiplier board J100
W5				A9 fractional-N synthesizer board J101 to A8 multiplier board J101
W6	SR	N5230-20077	1	A8 multiplier board to A19 MASSQuad
W21	F	N5230-60016	1	A20 mixer brick (A) to A5 SPAM board J1
W22	F	N5230-60019	1	A20 mixer brick (B) to A5 SPAM board J2
W23	F	N5230-60020	1	A20 mixer brick (C) to A5 SPAM board J4
W24	F	N5230-60021	1	A20 mixer brick (D) to A5 SPAM board J5
W25	F	N5230-60022	1	A20 mixer brick (R) to A5 SPAM board J6
W26	F	8120-5055	2	Rear-panel 10 MHz REF. IN to A10 frequency reference board J2
W27				A10 frequency reference board J3 to rear-panel 10 MHz REF. OUT
W28	F	N5230-60024	1	A10 frequency reference board J10 to A5 SPAM board J3
W70	F	N5230-60039	1	A10 frequency reference board J11 to A17 QABC board J800
①	40R	8121-0116	1	A3 front panel interface board J7 to A14 system motherboard J1

a. SR = semirigid coaxial cable; F = flexible coaxial cable; nR = n wires in a ribbon (flat) cable; nW = n wires in a wrapped cable

Figure 6-7 Top Cables, Options 146/246 (Top View)

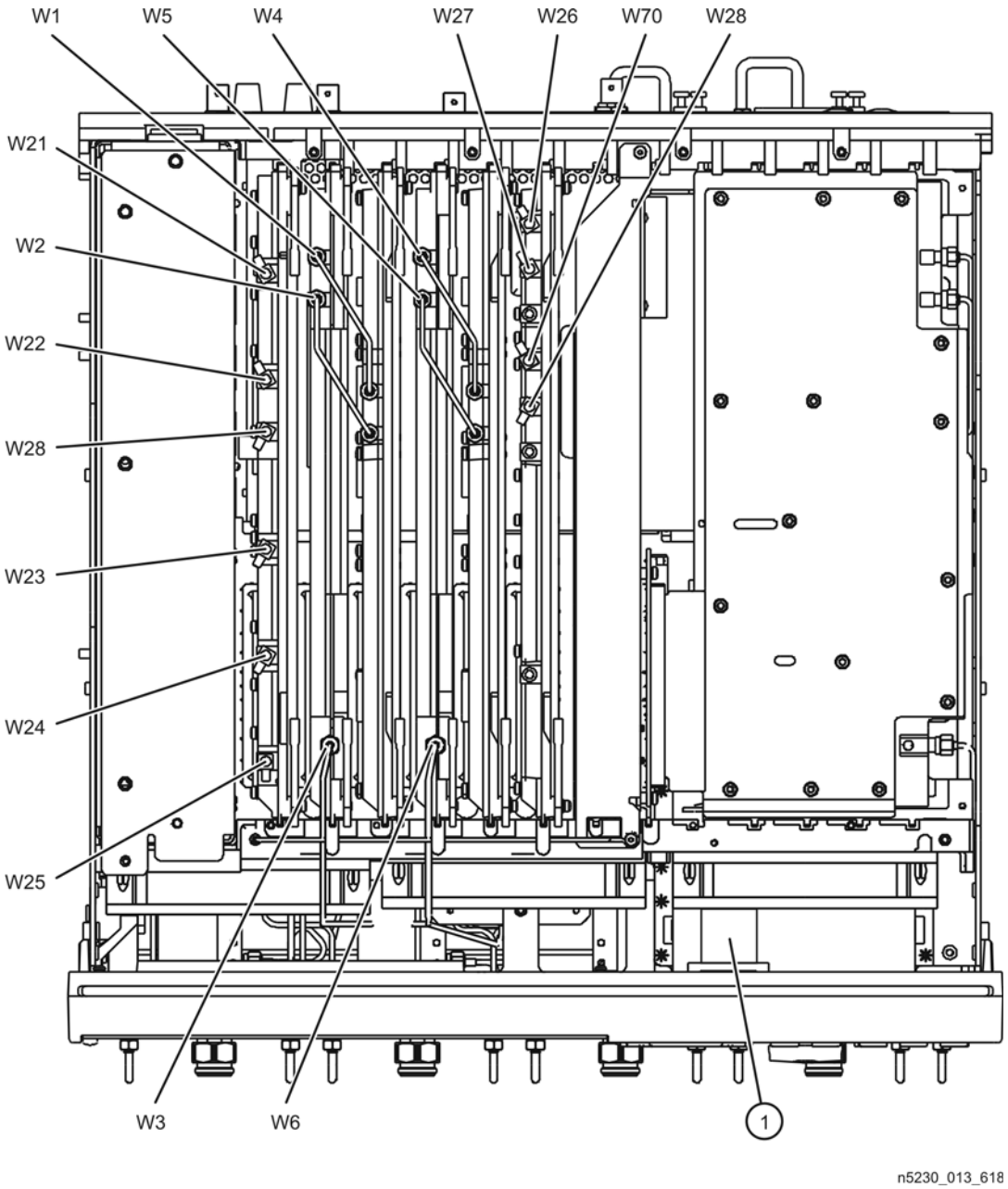

Top Cables, Options 146/246 (Side View)

Reference Designator	Type[a]	Part Number	Qty	Description
W61	SR	N5230-20041	2	A13 fractional-N synthesizer board J106 to A12 multiplier board J100
W62				A13 fractional-N synthesizer board J101 to A12 multiplier board J101
W63	SR	N5230-20096	1	A12 multiplier board to A18 MASSQuad
W64	SR	N5230-20091	1	A18 MASSQuad to front panel PORT 3 SOURCE OUT
W65	SR	N5230-20092	1	A18 MASSQuad to front panel PORT 4 SOURCE OUT
W67	SR	N5230-20095	1	A18 MASSQuad to A29 reference switch Port 2
W70	F	N5230-60039	1	A10 frequency reference J11 to A17 QABC board J800
W71	F	N5230-60040	1	A17 QABC board J801 to A7 fractional-N synthesizer J105
W72	F	N5230-60041	1	A17 QABC board J802 to A9 fractional-N synthesizer J105
W73	F	N5230-60042	1	A17 QABC board J803 to A13 fractional-N synthesizer J105
W74	F	N5230-60038	1	A17 QABC board J206 to A18 MASSQuad J23
W75	F	N5230-60037	1	A17 QABC board J204 to A18 MASSQuad J26
W76	10R	8121-0819	1	A17 QABC board P512 to A26 step attenuator
W77	26R	N5230-60027	1	A17 QABC board J4 to A18 MASSQuad J4
W78	SR	N5230-20089	1	A18 MASSQuad to A26 step attenuator
W79	SR	N5230-20090	1	A26 step attenuator to A18 MASSQuad
①	40R	8121-0116	1	A3 front panel interface board J7 to A14 system motherboard J1 (Not visible in illustration; see page 6-13.)
②	100R	8121-0118	1	A14 system motherboard to A16 test set motherboard (See page 6-13 for more detailed illustration.)
③	26R	8121-0120	1	A40 floppy disk drive to A14 system motherboard J2 (Not visible in illustration; see page 6-13.)
④	50R	8121-0817	1	A41 hard disk drive assembly to A15 CPU board (See page 6-13 for more detailed illustration.)
⑤	NA	1252-2219	1	Retainer clip for W77 A17J4 connection
⑥	NA	1252-2216	1	Retainer clip for W76 A17P512 connection
⑦	NA	1810-0118	2	50-ohm load (for unused A18 MASSQuad ports)
⑧	NA	0515-0372	3	Machine screw M3.0 x 8 pan head
⑨	NA	0515-2693	2	Machine screw M3.0 x 22 pan head

a. SR = semirigid coaxial cable; F = flexible coaxial cable; nR = n wires in a ribbon (flat) cable; nW = n wires in a wrapped cable

Figure 6-8 Top Cables, Options 146/246 (Side View)

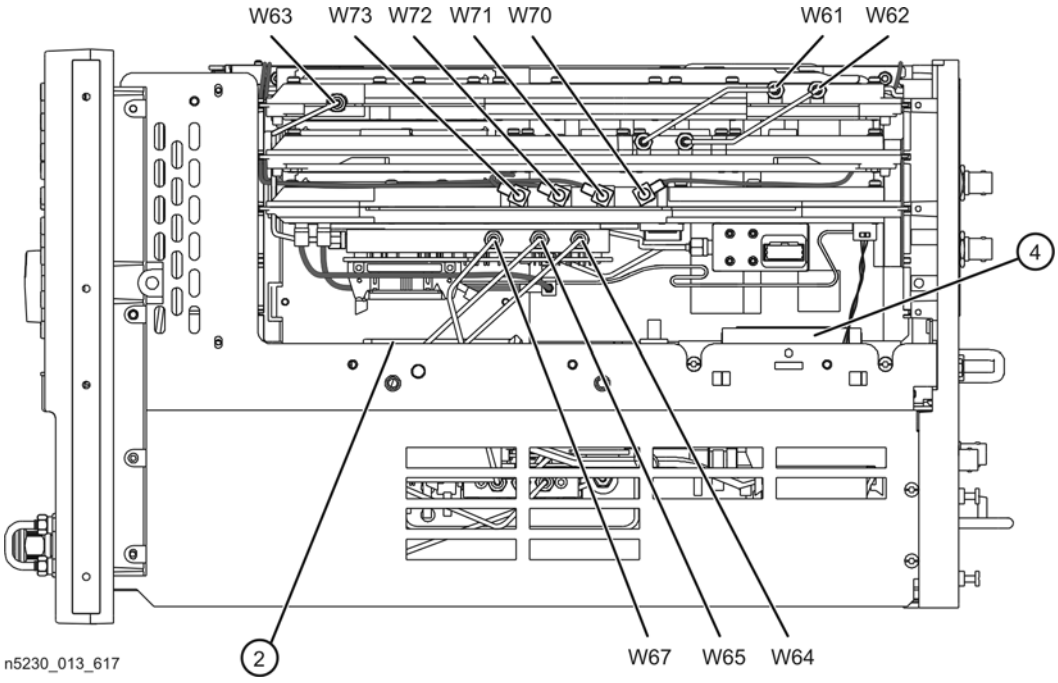

Figure 6-9 Top Cables, Options 146/246 (QABC Board)

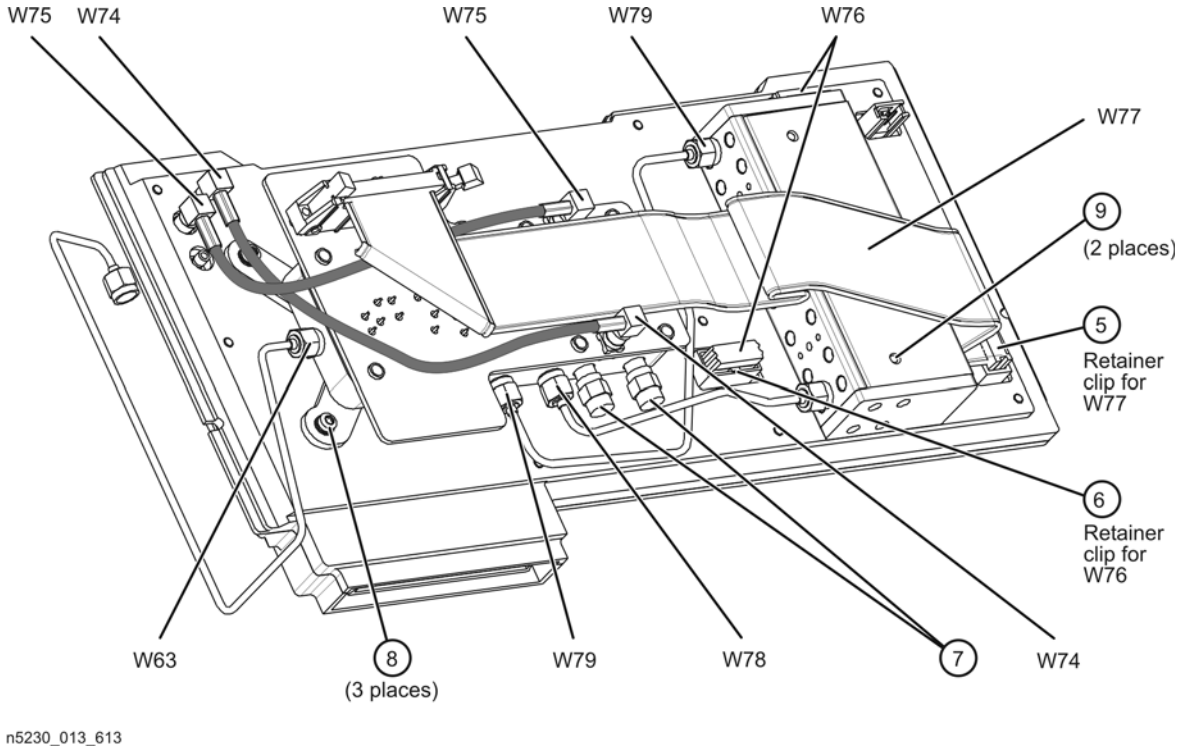

Bottom Assemblies, Options 140 and 240

Reference Designator	Part Number[a]	Qty	Description
A16	N5230-60078	1	Test set motherboard
A19	5087-7294 *5087-6294*	1	MASS 26.5 (MASSQuad)
A20	5087-7299 *5087-6299*	1	Mixer brick (QuintBrick)
A21 A22 A23 A24	5087-7301	4	Test port 1 coupler Test port 2 coupler Test port 3 coupler Test port 4 coupler
A41	Hard disk drive. Refer to "Hard Disk Drive Assembly, All Options" on page 6-42.		
①	E8361-60059	1	USB hub board

a. Part numbers in *italic* typeface are for rebuilt exchange assemblies. Refer to "Rebuilt-Exchange Assemblies" on page 6-5.

Figure 6-10 Bottom Assemblies, Options 140 and 240

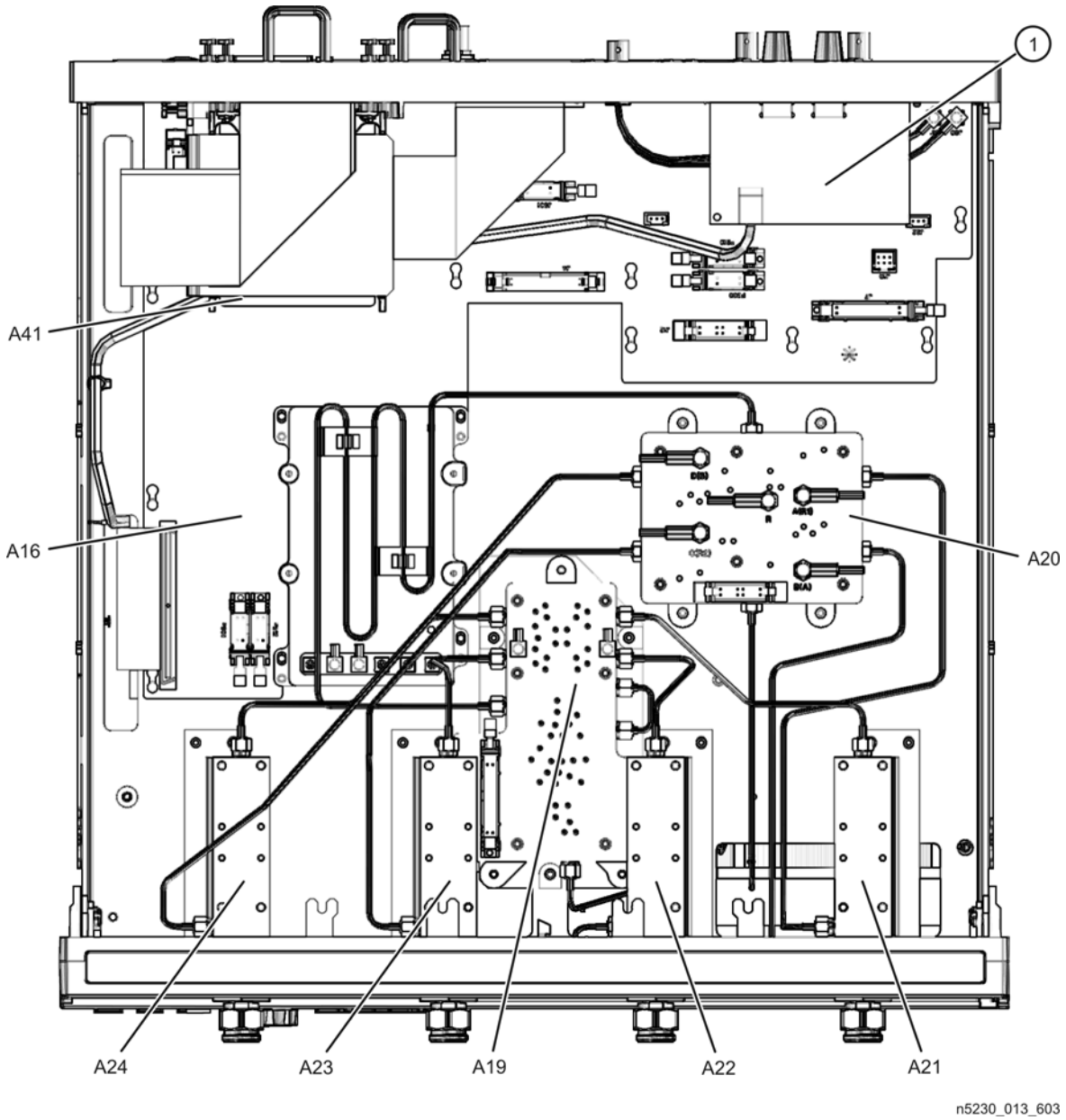

Bottom Cables, Options 140 and 240

Reference Designator	Type[a]	Part Number	Qty	Description
W3, W6	SR	Refer to "Top Cables, All Options Except 146/246" on page 6-12.		
W7	SR	08753-20183	1	Jumper cable (A19 MASSQuad to A19 MASSQuad)
W8	SR	N5230-20054	1	A19 MASSQuad to A21 test port 1 coupler
W9	SR	N5230-20056	1	A19 MASSQuad to A22 test port 2 coupler
W10	SR	N5230-20058	1	A19 MASSQuad to A23 test port 3 coupler
W11	SR	N5230-20060	1	A19 MASSQuad to A24 test port 4 coupler
W12	SR	N5230-20062	1	A19 MASSQuad to A20 mixer brick (R)
W13	SR	N5230-20055	1	A21 test port 1 coupler to A20 mixer brick (A)
W14	SR	N5230-20057	1	A22 test port 2 coupler to A20 mixer brick (B)
W15	SR	N5230-20059	1	A23 test port 3 coupler to A20 mixer brick (C)
W16	SR	N5230-20061	1	A24 test port 4 coupler to A20 mixer brick (D)
W21-W25	F	Refer to "Top Cables, All Options Except 146/246" on page 6-12.		
W31	F	N5230-60025	1	A19 MASSQuad J26 to A16 test set motherboard J204 (R)
W32	F	N5230-60026	1	A19 MASSQuad J23 to A16 test set motherboard J206 (MASS)
①	100R	8121-0118	1	A14 system motherboard to A16 test set motherboard
②	50R	8121-0817	1	A41 hard disk drive to A15 CPU board
③	4W	N5320-60028	1	Front panel LED board J1 to A16 test set motherboard J501
④	6W	N5230-60015	1	USB hub board J3 to A14 system motherboard J20
⑤	26R	N5230-60027	1	A19 MASSQuad J4 to A16 test set motherboard J4
⑥	16R	N5230-60013	1	A20 mixer brick J1 to A16 test set motherboard J12

a. SR = semirigid coaxial cable; F = flexible coaxial cable; nR = n wires in a ribbon (flat) cable; nW = n wires in a wrapped cable

Figure 6-11 Bottom Cables, Options 140 and 240

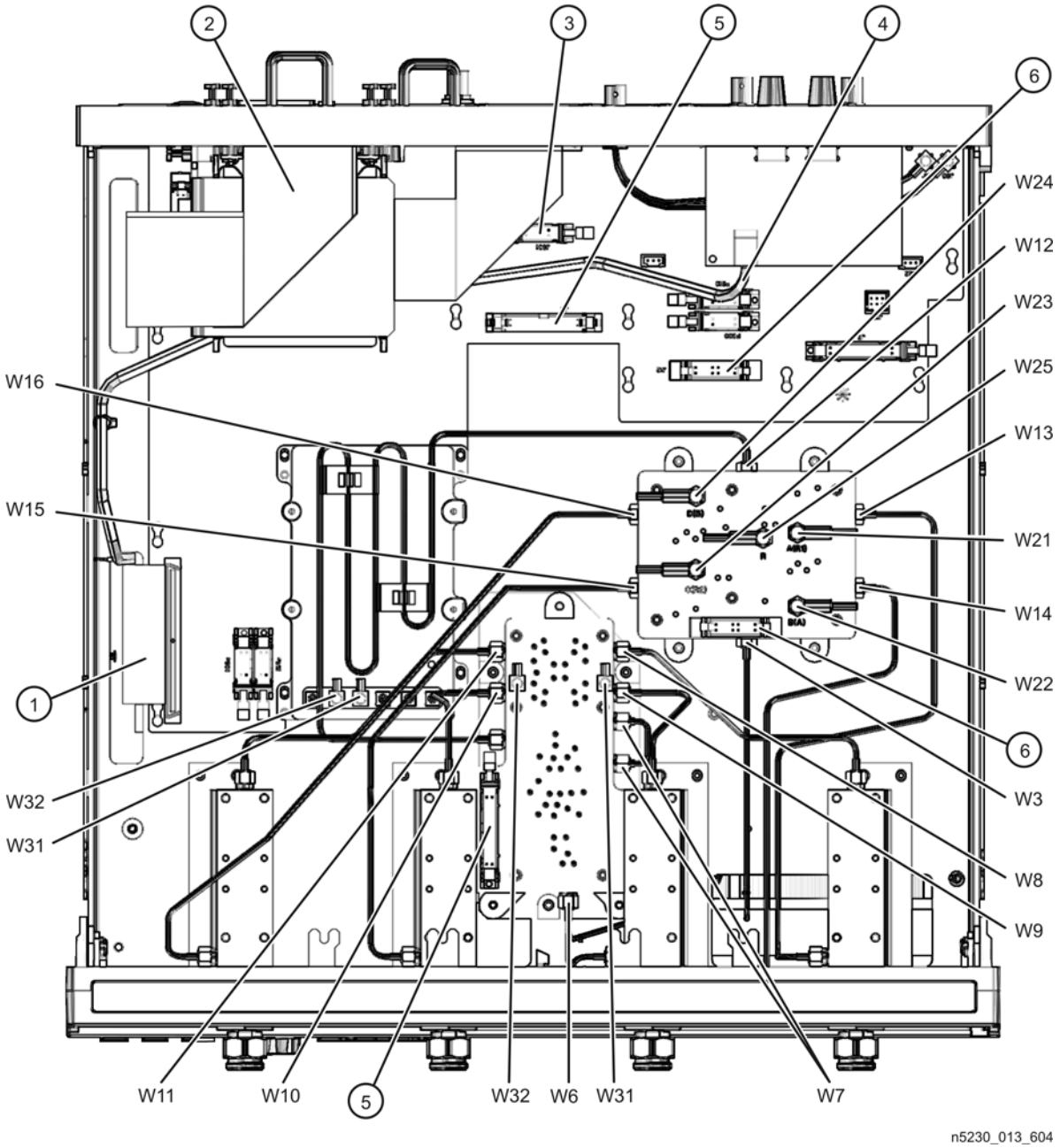

Bottom Assemblies, Options 145 and 245

Reference Designator	Part Number[a]	Qty	Description
A16	N5230-60078	1	Test set motherboard
A19	5087-7294 *5087-6294*	1	MASS 26.5 (MASSQuad)
A20	5087-7299 *5087-6299*	1	Mixer brick (QuintBrick)
A21 A22 A23 A24	5087-7301	4	Test port 1 coupler Test port 2 coupler Test port 3 coupler Test port 4 coupler
A25	33321-60065	1	Source 60-dB step attenuator
A41	Hard disk drive. Refer to "Hard Disk Drive Assembly, All Options" on page 6-42.		
①	E8361-60059	1	USB hub board

a. Part numbers in *italic* typeface are for rebuilt exchange assemblies. Refer to "Rebuilt-Exchange Assemblies" on page 6-5.

Figure 6-12 Bottom Assemblies, Options 145 and 245

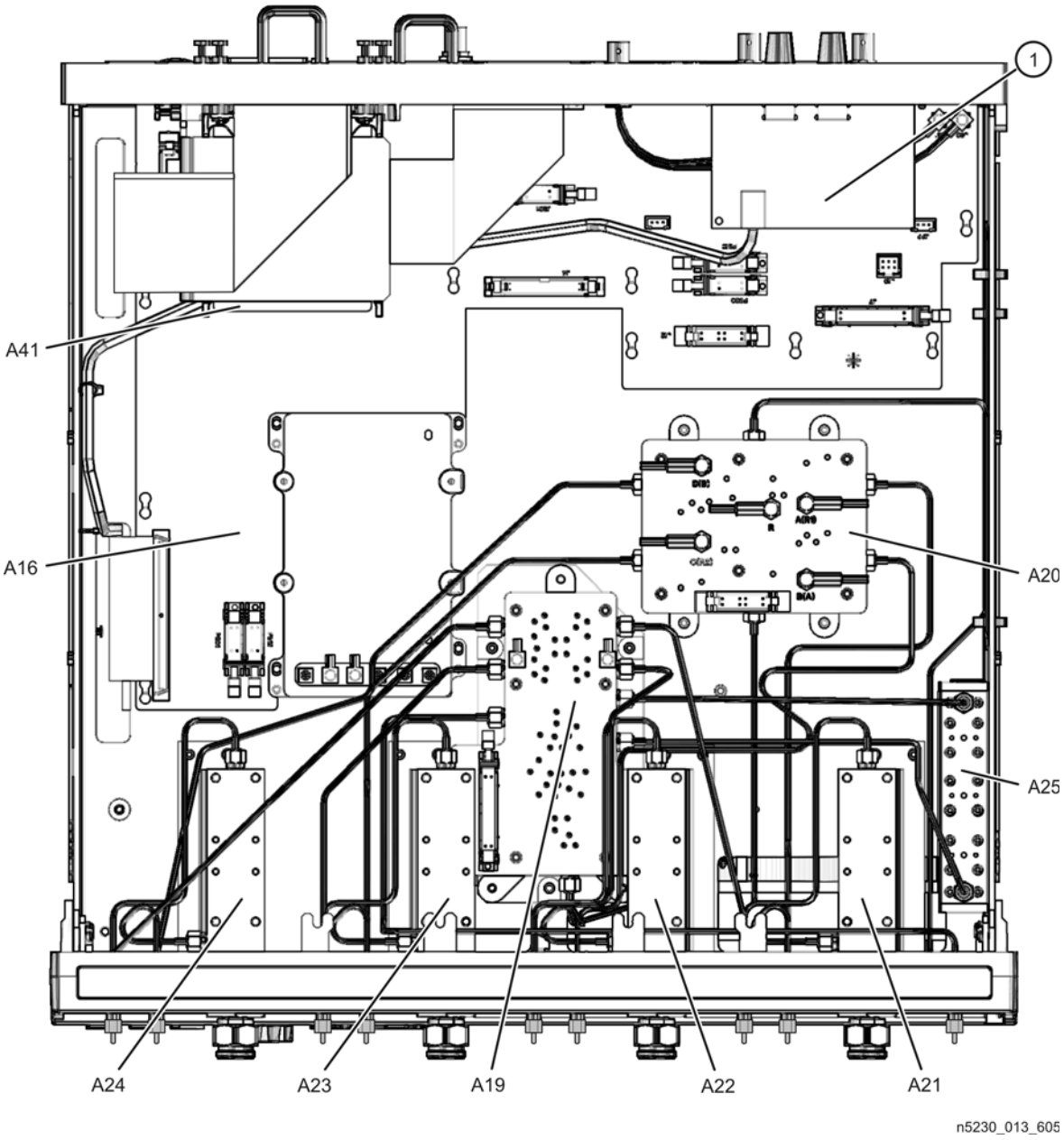

Bottom Cables, Options 145 and 245

Reference Designator	Type[a]	Part Number	Qty	Description
W3, W6	SR	Refer to "Top Cables, All Options Except 146/246" on page 6-12.		
W21-W25	F	Refer to "Top Cables, All Options Except 146/246" on page 6-12.		
W31	F	N5230-60025	1	A19 MASSQuad J26 to A16 test set motherboard J204 (R)
W32	F	N5230-60026	1	A19 MASSQuad J23 to A16 test set motherboard J206 (MASS)
W40	SR	N5230-20064	1	A19 MASSQuad to PORT 1 SOURCE OUT
W41	SR	N5230-20067	1	A19 MASSQuad to PORT 2 SOURCE OUT
W42	SR	N5230-20069	1	A19 MASSQuad to PORT 3 SOURCE OUT
W43	SR	N5230-20071	1	A19 MASSQuad to PORT 4 SOURCE OUT
W44	SR	N5230-20063	4	PORT 1 CPLR THRU to A21 test port 1 coupler
W45				PORT 2 CPLR THRU to A22 test port 2 coupler
W46				PORT 3 CPLR THRU to A23 test port 3 coupler
W47				PORT 4 CPLR THRU to A24 test port 4 coupler
W48	SR	N5230-20075	1	A19 MASSQuad (R) to REFERENCE SOURCE OUT
W49	SR	N5230-20065	4	A21 test port 1 coupler to PORT 1 CPLR ARM
W50				A22 test port 2 coupler to PORT 2 CPLR ARM
W51				A23 test port 3 coupler to PORT 3 CPLR ARM
W52				A24 test port 4 coupler to PORT 4 CPLR ARM
W53	SR	N5230-20066	1	PORT 1 RCVR A IN to A20 mixer brick (A)
W54	SR	N5230-20068	1	PORT 2 RCVR B IN to A20 mixer brick (B)
W55	SR	N5230-20070	1	PORT 3 RCVR C IN to A20 mixer brick (C)
W56	SR	N5230-20072	1	PORT 4 RCVR D IN to A20 mixer brick (D)
W57	SR	N5230-20076	1	REFERENCE RCVR IN to A20 mixer brick (R)
W58	SR	N5230-20073	1	A19 MASSQuad (ATTN) to A25 step attenuator
W59	SR	N5230-20074	1	A25 step attenuator to A19 MASSQuad (ATTN)
W60	SR	E8356-20072	9	Front panel jumper
①	100R	8121-0118	1	A14 system motherboard J8 to A16 test set motherboard J1
②	50R	8121-0817	1	A41 hard disk drive to A15 CPU board
③	4W	N5320-60028	1	Front panel LED board J1 to A16 test set motherboard J501
④	6W	N5230-60015	1	USB hub board J3 to A14 system motherboard J20
⑤	26R	N5230-60027	1	A19 MASSQuad J4 to A16 test set motherboard J4
⑥	16R	N5230-60013	1	A20 mixer brick J1 to A16 test set motherboard J12
⑦	10R	8121-0819	1	A25 step attenuator to A16 test set motherboard P510 (ATTN)

a. SR = semirigid coaxial cable; F = flexible coaxial cable; nR = n wires in a ribbon (flat) cable; nW = n wires in a wrapped cable

Figure 6-13 Bottom Cables, Options 145 and 245

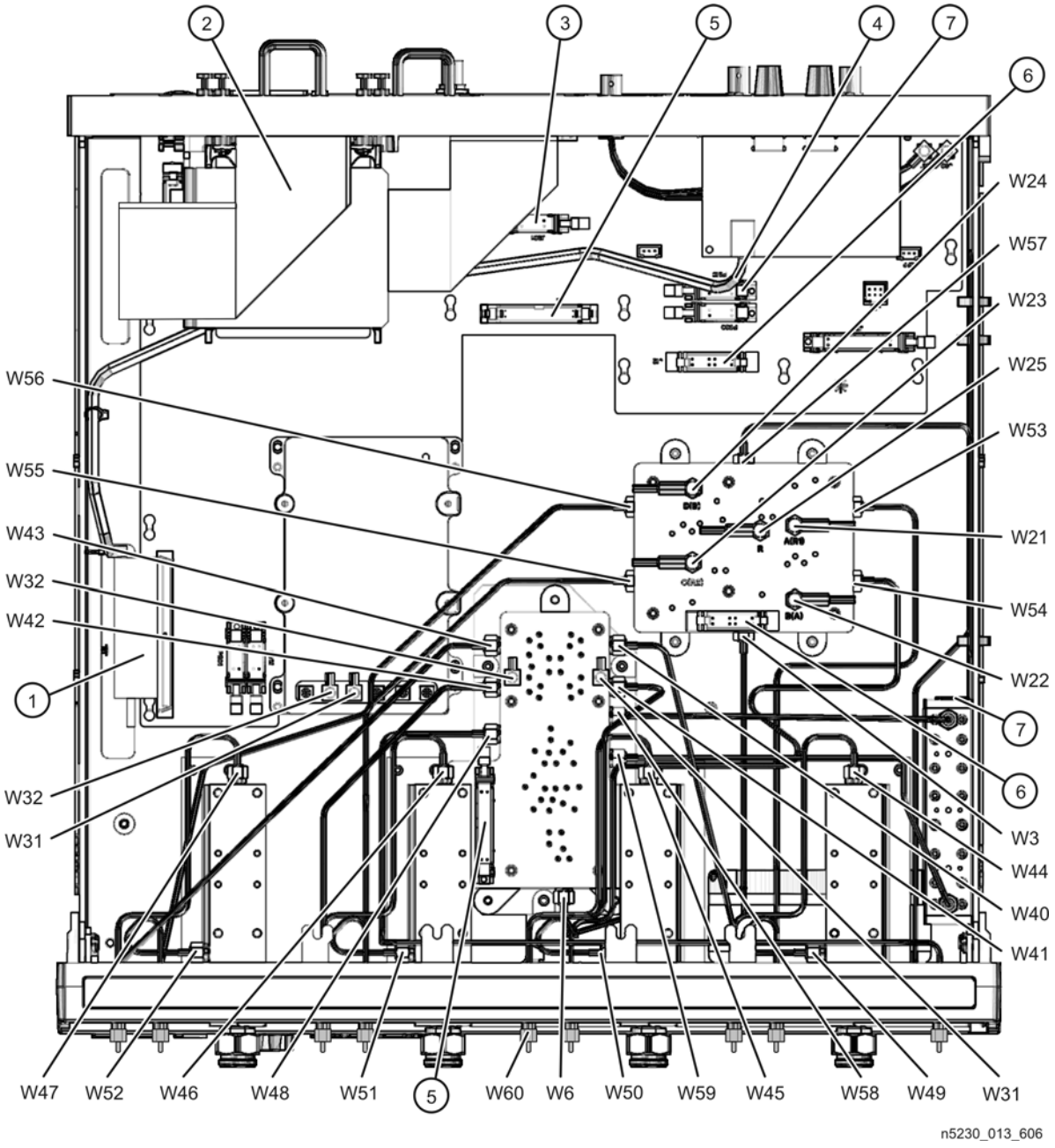

Bottom Assemblies, Options 146 and 246

Reference Designator	Part Number[a]	Qty	Description
A16	N5230-60078	1	Test set motherboard
A17	Refer to "Top Assemblies, Options 146/246" on page 6-14.		
A18	Refer to "Top Assemblies, Options 146/246" on page 6-14.		
A19	5087-7294 *5087-6294*	1	MASS 26.5 (MASSQuad)
A20	5087-7299 *5087-6299*	1	Mixer brick (QuintBrick)
A21 A22 A23 A24	5087-7301	4	Test port 1 coupler Test port 2 coupler Test port 3 coupler Test port 4 coupler
A25	33321-60065	1	Source 60-dB step attenuator
A26	Refer to "Top Assemblies, Options 146/246" on page 6-14.		
A29	5087-7714	1	Reference switch—with wiring harness
A41	Hard disk drive. Refer to "Hard Disk Drive Assembly, All Options" on page 6-42.		
①	E8361-60059	1	USB hub board
②	N9356-60001	1	Limiter
③	1250-3478	1	DC block
④	1810-0118	2	50-ohm load (for unused A19 MASSQuad ports)

a. Part numbers in *italic* typeface are for rebuilt exchange assemblies. Refer to "Rebuilt-Exchange Assemblies" on page 6-5.

Figure 6-14 Bottom Assemblies, Options 146 and 246

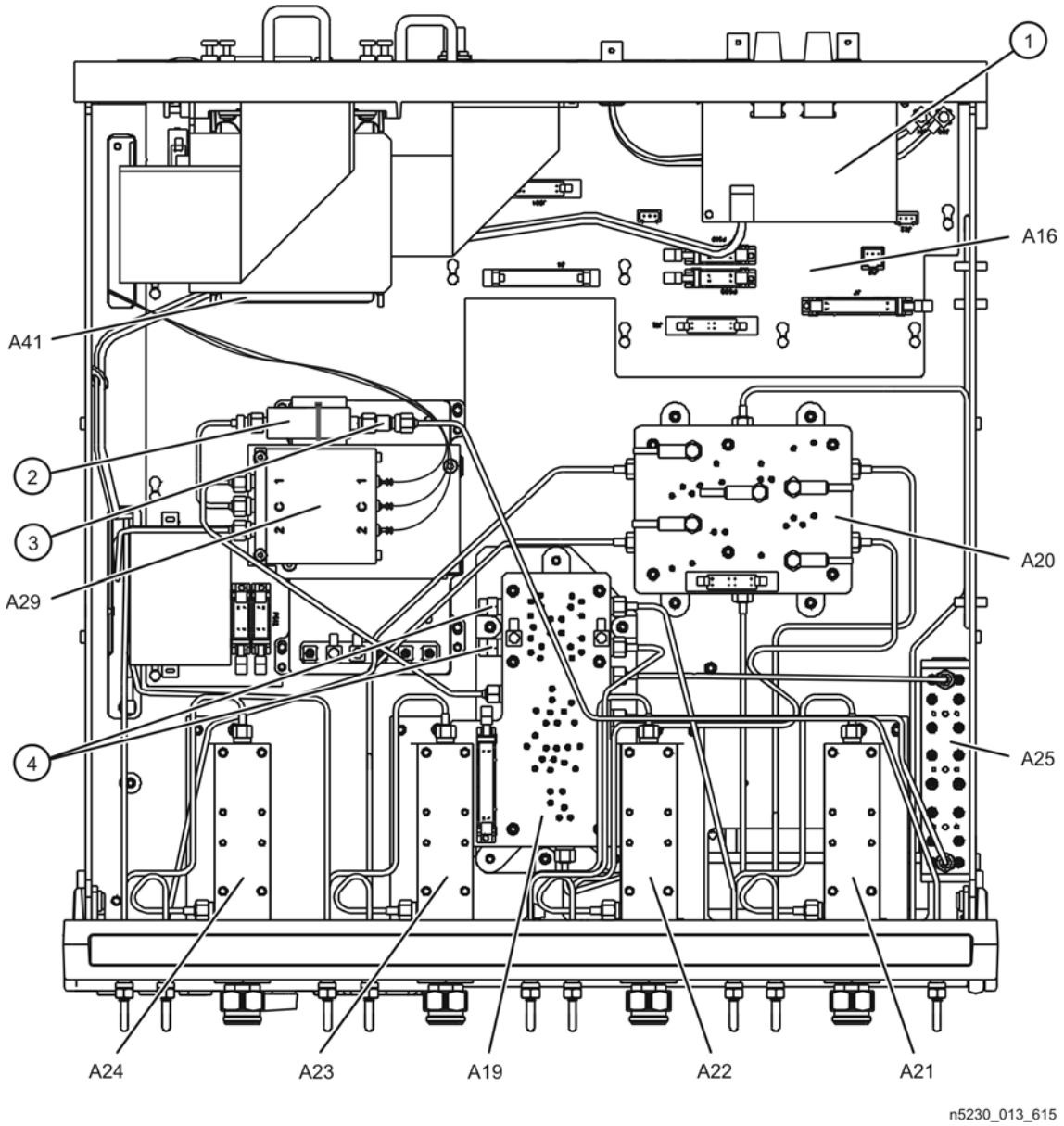

Bottom Cables, Options 146 and 246

Reference Designator	Type[a]	Part Number	Qty	Description
W3, W6	SR	Refer to "Top Cables, Options 146/246 (Top View)" on page 6-16.		
W21-W25	F	Refer to "Top Cables, Options 146/246 (Top View)" on page 6-16.		
W31	F	N5230-60025	1	A19 MASSQuad J26 to A16 test set motherboard J204 (R)
W32	F	N5230-60026	1	A19 MASSQuad J23 to A16 test set motherboard J206 (MASS)
W40	SR	N5230-20064	1	A19 MASSQuad to PORT 1 SOURCE OUT
W41	SR	N5230-20067	1	A19 MASSQuad to PORT 2 SOURCE OUT
W42	SR	N5230-20069	1	A19 MASSQuad to PORT 3 SOURCE OUT
W43	SR	N5230-20071	1	A19 MASSQuad to PORT 4 SOURCE OUT
W44	SR	N5230-20063	4	PORT 1 CPLR THRU to A21 test port 1 coupler
W45				PORT 2 CPLR THRU to A22 test port 2 coupler
W46				PORT 3 CPLR THRU to A23 test port 3 coupler
W47				PORT 4 CPLR THRU to A24 test port 4 coupler
W48	SR	N5230-20075	1	A19 MASSQuad (R) to REFERENCE SOURCE OUT
W49	SR	N5230-20065	4	A21 test port 1 coupler to PORT 1 CPLR ARM
W50				A22 test port 2 coupler to PORT 2 CPLR ARM
W51				A23 test port 3 coupler to PORT 3 CPLR ARM
W52				A24 test port 4 coupler to PORT 4 CPLR ARM
W53	SR	N5230-20066	1	PORT 1 RCVR A IN to A20 mixer brick (A)
W54	SR	N5230-20068	1	PORT 2 RCVR B IN to A20 mixer brick (B)
W55	SR	N5230-20070	1	PORT 3 RCVR C IN to A20 mixer brick (C)
W56	SR	N5230-20072	1	PORT 4 RCVR D IN to A20 mixer brick (D)
W58	SR	N5230-20073	1	A19 MASSQuad (ATTN) to A25 step attenuator
W59	SR	N5230-20074	1	A25 step attenuator to A19 MASSQuad (ATTN)
W60	SR	E8356-20072	9	Front panel jumper
W64	SR	N5230-20091	1	A18 MASSQuad to PORT 3 SOURCE OUT
W65	SR	N5230-20092	1	A18 MASSQuad to PORT 4 SOURCE OUT
W66	SR	N5230-20094	1	A19 MASSQuad to A29 reference switch port 1
W67	SR	N5230-20095	1	A19 MASSQuad to A29 reference switch port 2
W68	SR	N5230-20100	1	A29 reference switch center port to limiter
W69	SR	N5230-20093	1	DC block to front panel REFERENCE SOURCE OUT
W80	SR	N5230-20097	1	REFERENCE RCVR IN to A20 mixer brick (R)
①	100R	8121-0118	1	A14 system motherboard J8 to A16 test set motherboard J1
②	50R	8121-0817	1	A41 hard disk drive to A15 CPU board
③	4W	N5320-60028	1	Front panel LED board J1 to A16 test set motherboard J501
④	6W	N5230-60015	1	USB hub board J3 to A14 system motherboard J20

Reference Designator	Type[a]	Part Number	Qty	Description
⑤	26R	N5230-60027	1	A19 MASSQuad J4 to A16 test set motherboard J4
⑥	16R	N5230-60013	1	A20 mixer brick J1 to A16 test set motherboard J12
⑦	10R	8121-0819	1	A25 step attenuator to A16 test set motherboard P510 (ATTN)

a. SR = semirigid coaxial cable; F = flexible coaxial cable; nR = n wires in a ribbon (flat) cable; nW = n wires in a wrapped cable

Figure 6-15 Bottom Cables, Options 146 and 246

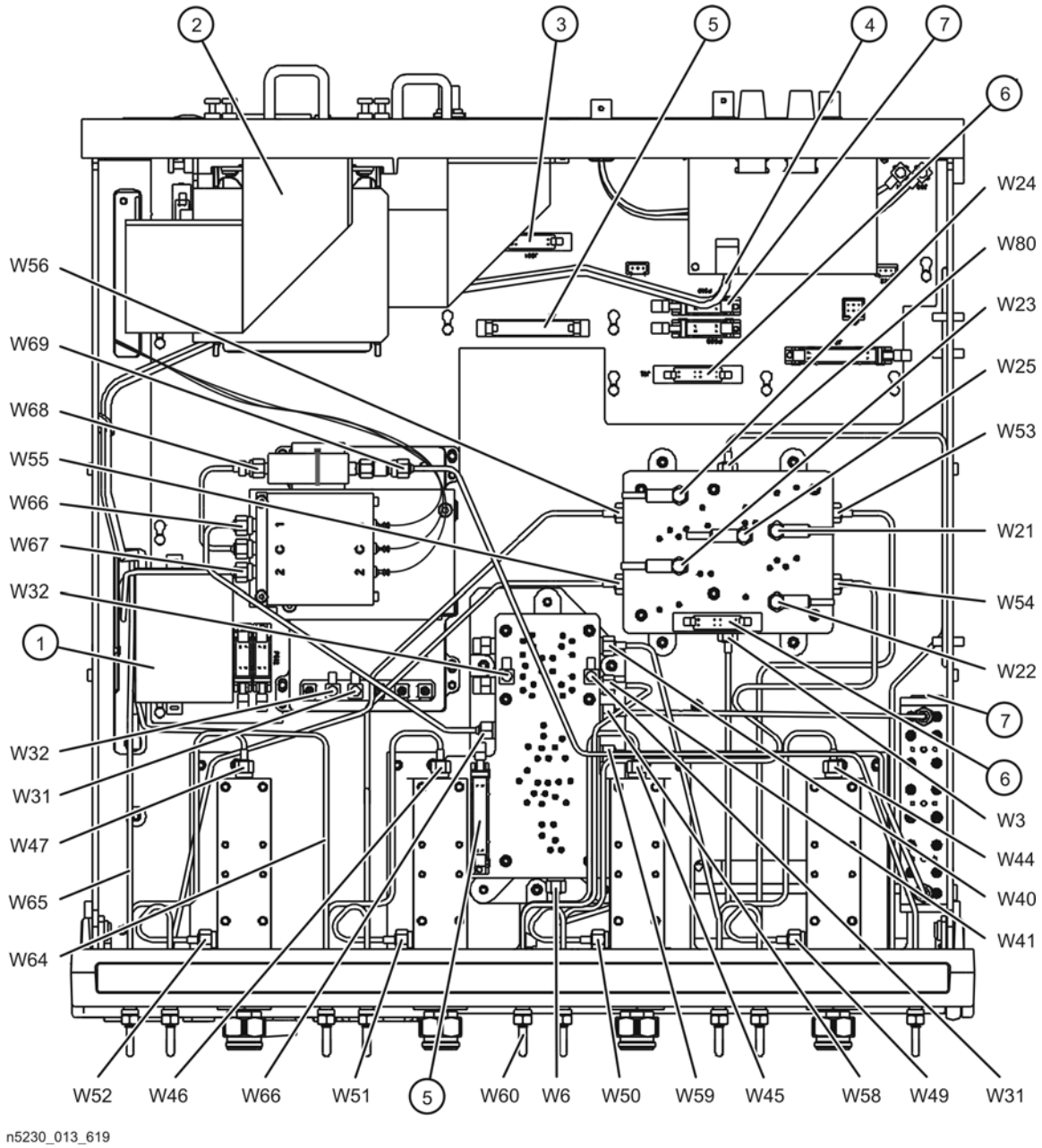

Top Hardware and Miscellaneous Parts, All Options

Reference Designator	Part Number	Qty	Description
A40	Floppy disk drive		Refer to "Internal Hardware and Miscellaneous Parts, All Options" on page 6-36.
B1	Fans		
①	5022-6134	1	Cable hold down wire
②	N5230-20040	1	Ejector block
③	0515-0374	6	Machine screw, M3.0 x 10, pan head (2 for ejector block ② and four for A14 system motherboard)
④	E8356-40001	1	Air flow plenum
⑤	0515-0372	16	Machine screw, M3.0 x 6, pan head (5 for A4 power supply, 3 for plenum ④, 6 for A11 vertical motherboard, and 2 for plenum bracket ⑥ and cable hold down wire ①)
⑥	E8356-00033	1	Plenum bracket
⑦	1440-0421	2	U-handle, finger grip (1 for hard disk drive, 1 for CPU board)

Figure 6-16 Top Hardware and Miscellaneous Parts, All Options (Side View)

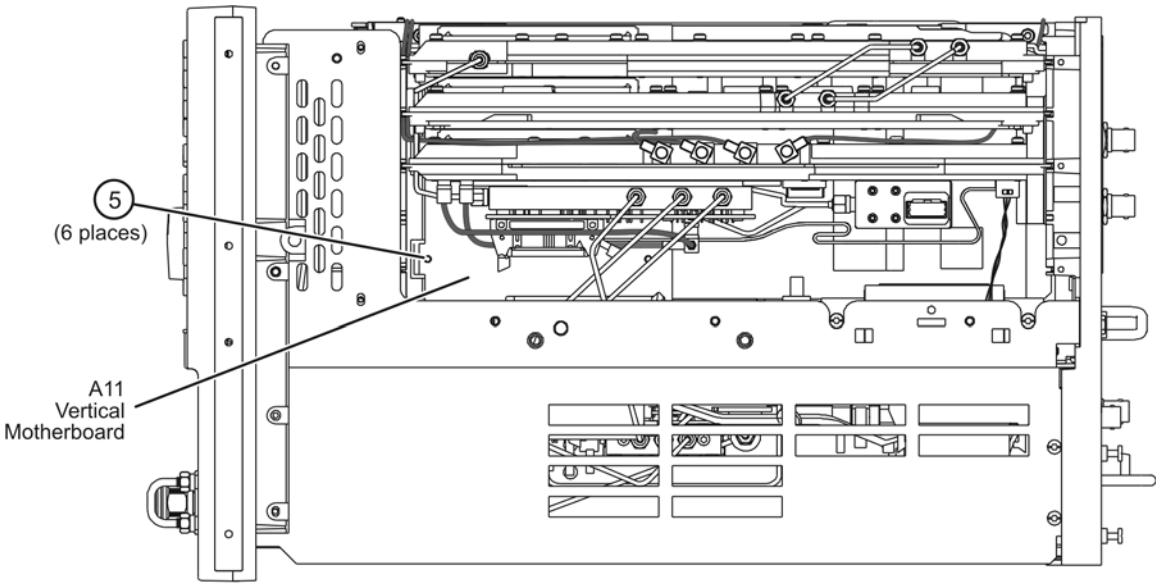

Figure 6-17 Top Hardware and Miscellaneous Parts, All Options (Top View)

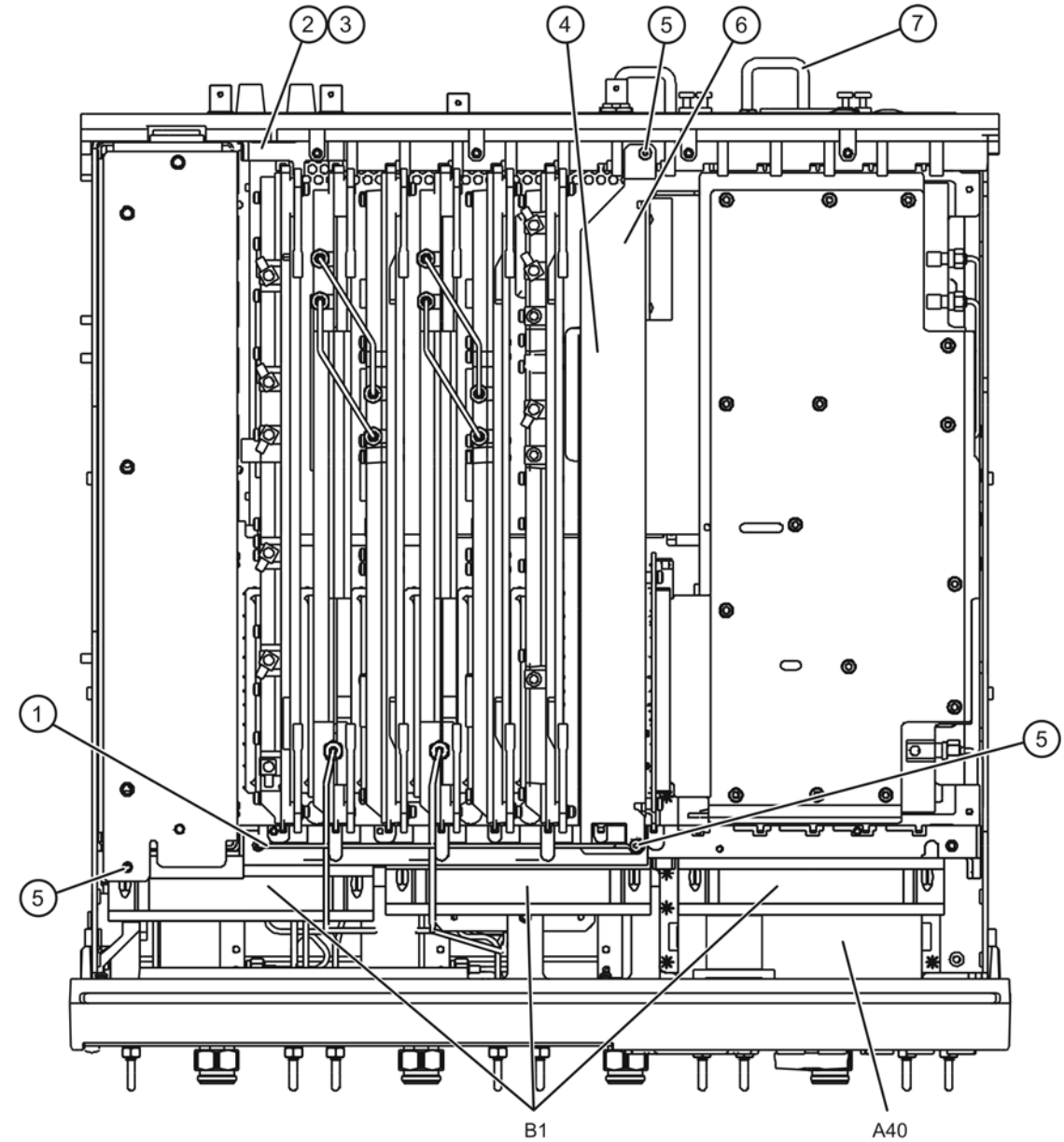

n5230_013_620-2

Bottom Hardware and Miscellaneous Parts, All Options

Reference Designator	Part Number	Qty	Description
①	E8361-60059	1	USB hub board
②	0515-1934	2	Machine screw M2.5 x 6 (for mounting USB hub board ①)
③	0515-0430	6	Machine screw M3.0 x 6 pan head (2 for front panel LED board ⑦ and 4 for A20 mixer brick)
④	0515-0372	22	Machine screw M3.0 x 8 pan head (3 for A19 MASSQuad, 3 for MASSQuad block ⑨, and 4 each for coupler blocks ⑧)
⑤	0515-0374	2	Machine screw M3.0 x 10 pan head (for mounting A25 step attenuator)
⑥	N5230-20080	4	Coupler blocks (for mounting A21–A24 couplers)
⑦	0515-2012	16	Machine screw M3.5 x 25 pan head (4 each for A21–A24 couplers)
⑧	N5230-60079	1	Front-panel LED board
⑨	N5230-20053	1	MASSQuad block (for mounting A19 MASSQuad)
⑩	N5230-00007	1	Reference switch mounting bracket
⑪	0515-1227	3	Machine screw M3.0 x 6 flat head (for mounting reference switch mounting bracket)
⑫	0515-1992	2	Machine screw M2.5 x 20 pan head (for mounting reference switch)
⑬	1400-0249	1	Cable tie (to attach limiter to cable tie mount)
⑭	1400-1626	1	Cable tie mount (for mounting the limiter)
⑮	0515-0664	4	Machine screw M3.0 x 12 pan head (for A16 test set motherboard)
⑯	E8364-00007	1	Hard disk drive shield, stationary bracket

Figure 6-18 Bottom Hardware and Miscellaneous Parts, All Options

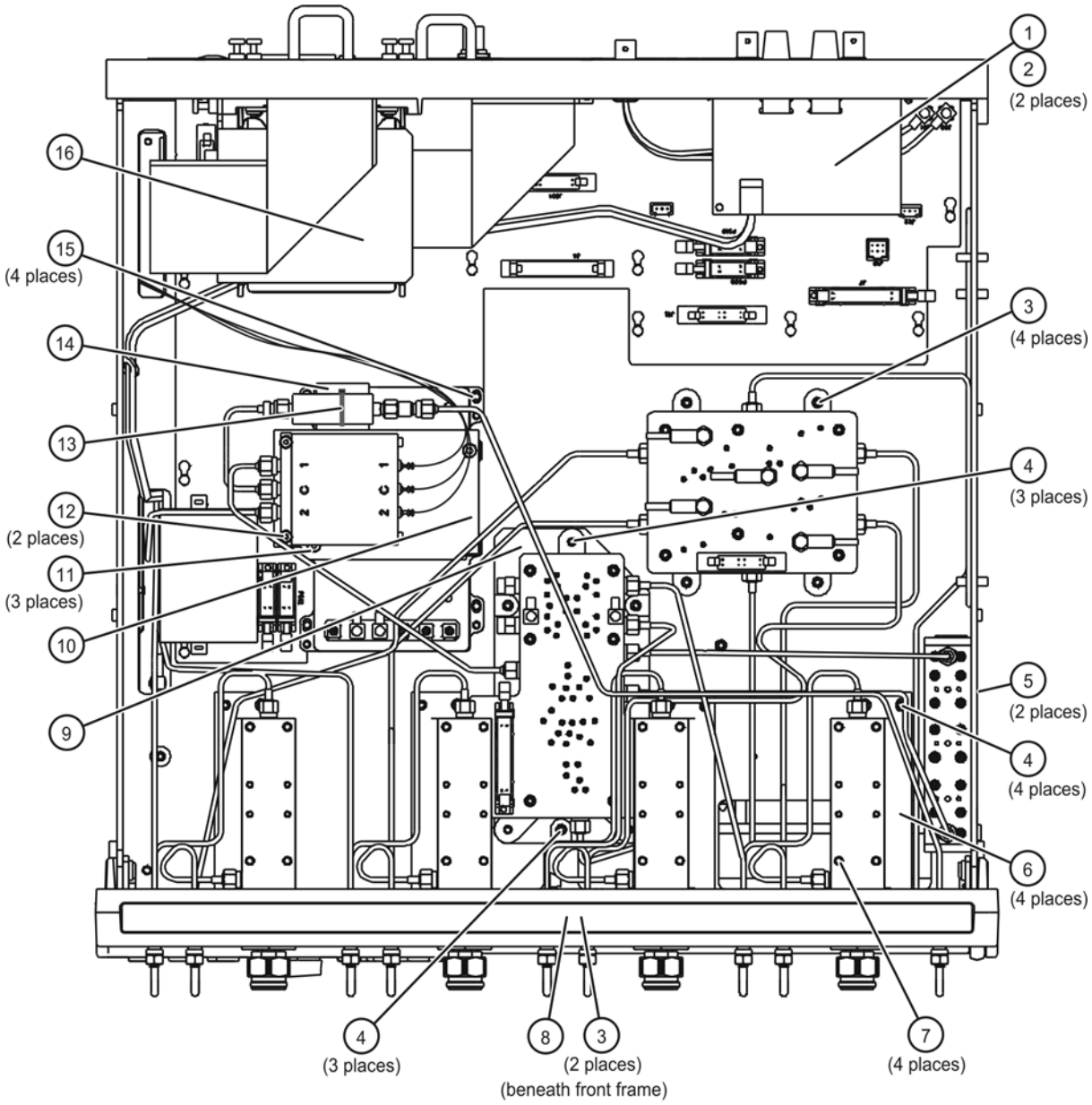

Internal Hardware and Miscellaneous Parts, All Options

Reference Designator	Part Number	Qty	Description
A40	0950-2782	1	Floppy disk drive
	8121-0120	1	Cable
	E4406-60014	1	Floppy disk drive board
	E4406-40006	1	Floppy disk drive mount
	E8356-00007	1	Floppy disk drive enclosure
B1	3160-1085	3	Fan
①	E8356-00014	1	Hard disk drive cable interface board bracket
②	E8356-60024	1	Hard disk drive cable interface board
③	0515-1227	10	Machine screw, M3.0 x 6 flat head (2 to attach ② to ①, 8 to attach ⑧ to ⑥)
④	0515-0372	6	Machine screw, M3.0 x 8, pan head (2 to attach ① to CPU board cover, 4 to attach ⑭ to ⑤)
⑤	E8356-00027	1	Chassis assembly
⑥	N5230-00003	1	Test set deck
⑦	N5230-20081	4	Test port coupler dress nut
⑧	N5230-00004	1	Test set deck front panel
⑨	P/O RF cable	18	3.5 mm (f) bulkhead connectors
⑩	P/O RF cable	18	Washer (for bulkhead connectors, ⑨)
⑪	P/O RF cable	18	Hex nut (for bulkhead connectors, ⑨)
⑫	E8356-40004	1	Line switch button
⑬	1460-2632	1	Line switch spring
⑭	N5230-60043	1	Midweb assembly (includes three fans, B1)

Figure 6-19 Internal Hardware and Miscellaneous Parts, All Options

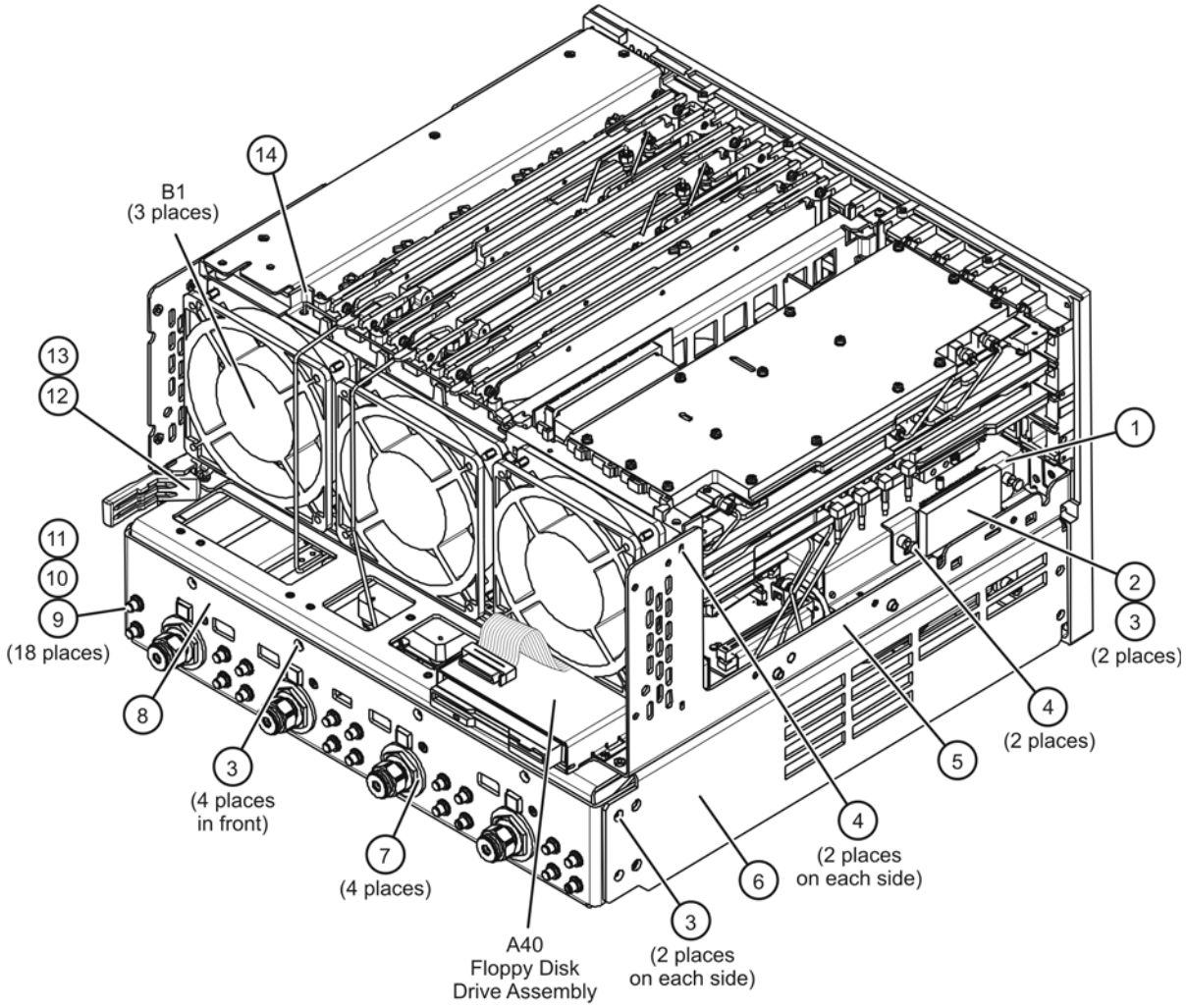

External Hardware and Miscellaneous Parts, All Options

Reference Designator	Part Number	Qty	Description
①	N5230-00012	1	Inner cover
②	N5230-40001	3	Retainer block (foam pad) on inside of inner cover (Options 146 and 246 only)
③	0515-1227	4 or 5	Machine screw M3.0 x 6, flat head
④	N5230-00011	1	Outer cover
⑤	5041-9611	4	Rear feet
⑥	0515-1619	4	Machine screw M4.0 x 25, pan head
⑦	E4400-60026	2	Strap handle assembly (includes item ⑧)
⑧	0515-0372	7	Machine screw M3.0 x 8,pan head
⑨	0515-0710	4	Machine screw M5.0 x 18, flat head
⑩	5041-9167	4	Bottom feet
⑪	5041-9183	2	With handles—front handle side trim
	5041-9174	2	Without handles—trim strip, filler
⑫	5063-9205	2	Front handle

Figure 6-20 External Hardware and Miscellaneous Parts, All Options

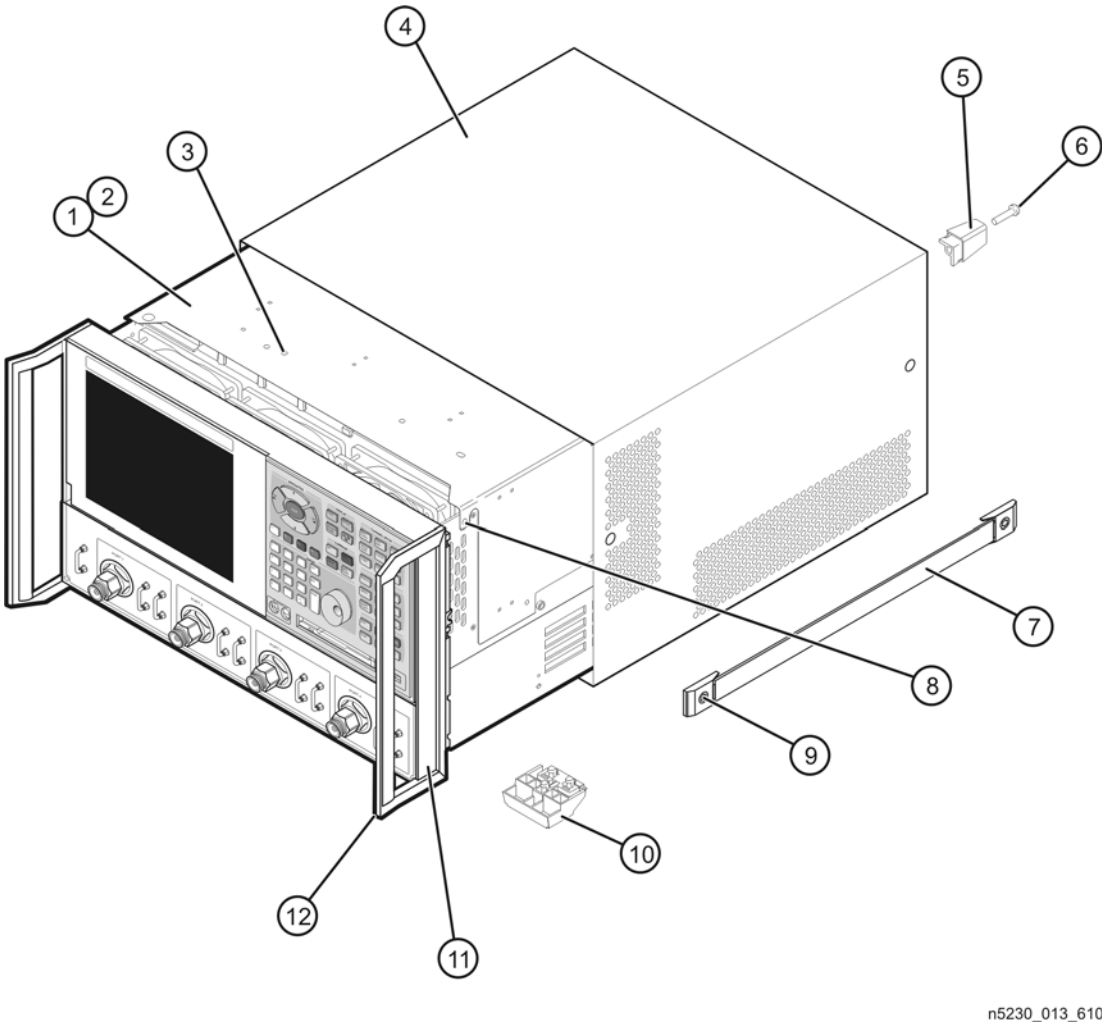

Rear Panel Assembly, All Options

Item Number	Part Number	Qty	Description
①	E8364-60023	1	Rear frame assembly (includes items ②–⑦)
②	E8356-00023	1	Cover plate, large
③	6960-0149	5	Hole plug
④	0515-0372	33	Machine screw, M3.0 x 8, pan head
⑤	8120-5055	2	BNC cable assembly
⑥	2950-0035	4	Hex nut (for BNC connector, ⑤ and ⑧)
⑦	2190-0102	4	Lock washer (for BNC connector, ⑤ and ⑧)
⑧	8120-5027	2	BNC cable assembly
⑨	E8356-00022	1	Cover plate, digital section
⑩	0515-0374	9	Machine screw, M3.0 x 10, pan head (to secure item ⑪)
⑪	N5230-00002	1	Test set motherboard rear panel (P/O A16)
⑫	85047-00017	2	Fuse holder (includes wire harness, nut, and washer)[a]
⑬	1400-0012	2	Fuse holder cap
⑭	E8364-60095	1	Hard disk drive stationary board with mating connector
⑮	1440-0421	2	U-handle, finger grip (1 for hard disk drive and 1 for CPU board)
⑯	0515-1227	4	Machine screw, M3.0 x 6, flat head (for U-handles, ⑯)
⑰	0515-1410	2	Machine screw, M3.0 x 20, pan head (to secure item ⑭)

a. See page 6-44 for the part number of the fuses.

Figure 6-21 Rear Panel Assembly, All Options

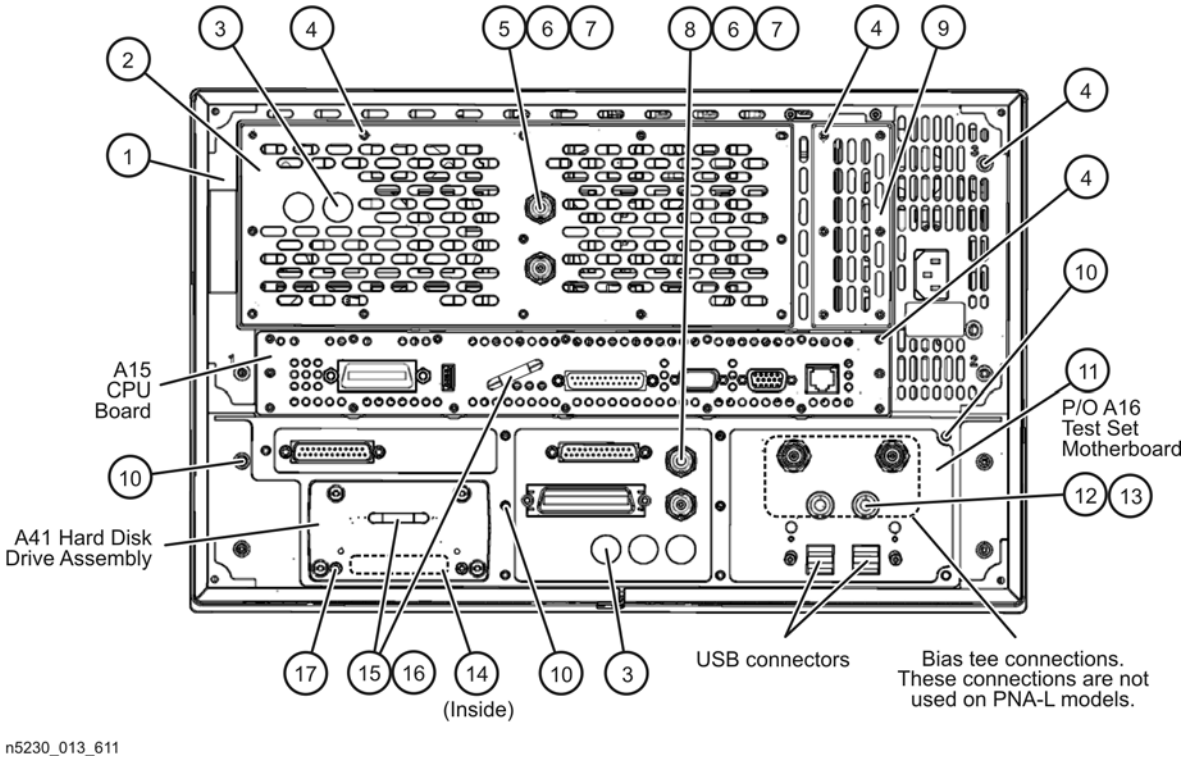

Hard Disk Drive Assembly, All Options

Reference Designator	Part Number	Qty	Description
	N8980A[a] Kit *(for 500 MHz CPU board)* *-or-* N8981A[a] Kit *(for 1.1 GHz CPU board)*		Hard disk drive assembly kit with programmed hard disk drive (HDD) (Includes A41 and items ① through ⑦ pre-assembled.)
A41	E8801-60063 *(for 500 MHz CPU board)* *-or-* E8364-60190 *(for 1.1 GHz CPU board)*	1	Programmed hard disk drive (HDD)
①	E8364-20118	1	Hard disk drive bracket
②	0515-0664	4	Machine screw, M3.0 x 12, pan head
③	0515-0372	2	Machine screw, M3.0 x 8, pan head
④	0340-1525	8	Bushing
⑤	E8364-60094	1	Hard disk drive board
⑥	1440-0421	1	U-handle, finger grip
⑦	0515-1227	2	Machine screw, M3.0 x 6, flat head (for U-handle, ⑥)

a. Assembly includes HDD and all hardware listed in this table.

Figure 6-22 Hard Disk Drive Assembly, All Options

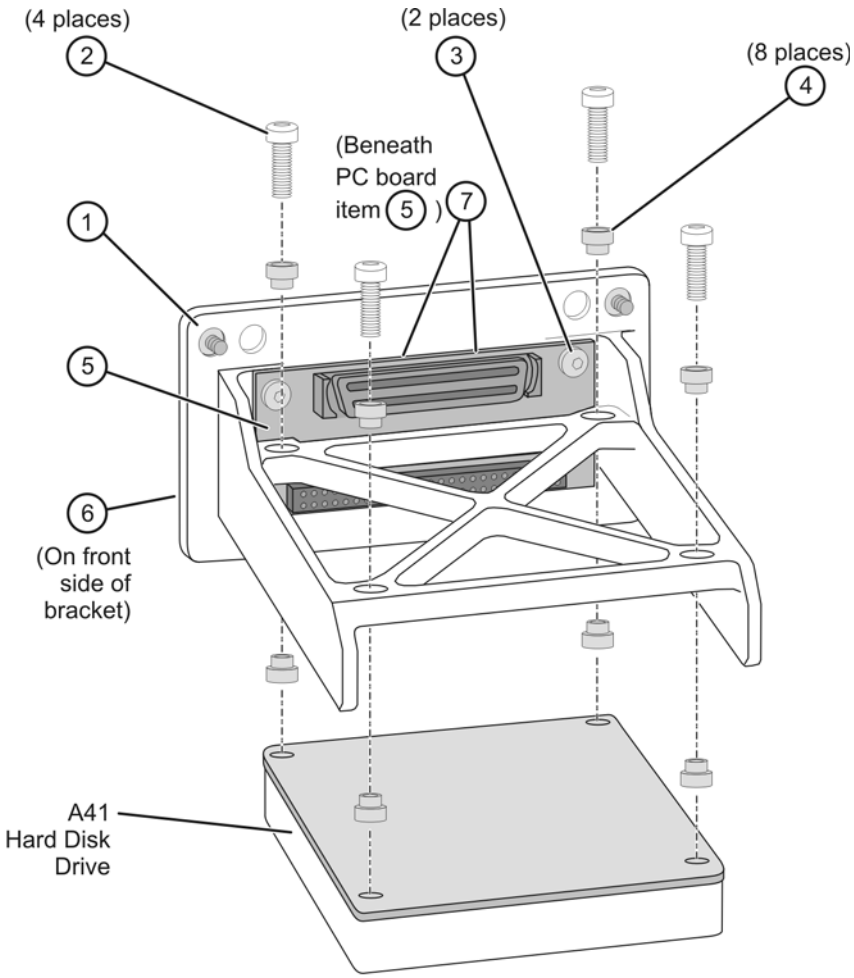

Note: N8980A and N8981A hard disk drive kits include the A41 hard disk drive and items 1 through 7, pre-assembled.

st532a

Miscellaneous Part Numbers

Table 6-3 Part Numbers for Miscellaneous Parts and Accessories

Description	Model or Part Number
Service Tools	
Extender board, synthesizer/reference	E8356-60021
1/4 inch and 5/16 inch open-end wrench, thin profile	8710-0510
5/16 inch (8 mm), open-end torque wrench; 0.9 N-m (8 in-lb)	8710-1765
20 mm open-end torque wrench; 0.9 N-m (8 in-lb)	8710-1764
Spanner wrench	08513-20014
Documentation	
Installation and Quick Start Guide (for all PNA analyzers) (Cannot be ordered. Part number is for reference only. Must be printed from the Agilent Web site. Refer to "Printing Copies of Documentation from the Web" on page iv.)	E8356-90001
Service Guide. (Not available in printed form. Part number is for reference only. Must be printed from the Agilent Web site. Refer to "Printing Copies of Documentation from the Web" on page iv.)	N5230-90013
Protective Caps for Connectors	
Protective cap for GPIB connector	1252-5007
Protective cap for Test Set I/O connector	1252-1935
Protective cap for Aux I/O connector	1252-4691
Protective cap for Handler I/O connector	1253-5320
Protective cap for Display (VGA) connector	1252-0220
Protective cap for Serial (RS-232) connector	1252-3422
Protective cap for Parallel (1284-C) connector	1252-1935
GPIB Cables/GPIB Adapter	
GPIB cable, 0.5 meter (1.6 feet)	10833D
GPIB cable, 1 meter (3.3 feet)	10833A
GPIB cable, 2 meter (6.6 feet)	10833B
GPIB cable, 4 meter (13.2 feet)	10833C
GPIB cable to GPIB cable adapter	10834A
Fuses	
Rear Panel Bias Input Fuse Port 1, Port 2 (0.5 A, 125 V) (Option UNL)	2110-0046

Table 6-3 Part Numbers for Miscellaneous Parts and Accessories (Continued)

Description	Model or Part Number
ESD Supplies	
Adjustable antistatic wrist strap	9300-1367
Antistatic wrist strap grounding cord *(5 foot length)*	9300-0980
Static control table mat and earth ground wire	9300-0797
ESD heel strap	9300-1126
EMI/RFI Shielding Accessories	
5 mm ferrite bead for probe power	9170-2047
7 mm ferrite bead for serial cable	9170-1793
9 mm ferrite bead for parallel port	9170-1702
Memory Modules	
256 MB module, 32 M x 64, PC100, 144-pin, SO DIMM	1818-8825
Upgrade Kits	
Time Domain (Option 010)	N5230AU-010
Frequency Offset Mode (Option 080)	N5230AU-080
13.5 GHz or 20 GHz Standard Test Set to Configurable Test Set with Extended Power Range (Option 140 to 145 or 240 to 245)	N5230AU-926
Add Second Source to 13.5 GHz Configurable Test Set with Extended Power Range (Option 145 to 146)	N5230AU-928
Add Second Source to 20 GHz Configurable Test Set with Extended Power Range (Option 245 to 246)	N5230AU-927
Frequency Extension, 13.5 to 20 GHz (Option 140 to 240 or 145 to 245)	N5230AU-966
USB Accessories	
Mouse	1150-7799
Keyboard (U.S. style)	1150-7896
Read/write CD-ROM	N4688A
Rack Mount Kits and Handle Kits	
Rack mount kit for use with standard supplied front handles (Option 1CP)	5063-9237
Rack mount flange for use with front handles (two included in 5063-9237)	5022-2809
Rack mount kit for use without front handles (Option 1CM)	5063-9217
Rack mount flange for use without front handles (two included in 5063-9217)	5022-2802
Front handle kit (two handles and hardware)	5063-9230
Front handle (two included in 5063-9230)	5063-9205
Rack mount rail set	E3663AC

Table 6-3 Part Numbers for Miscellaneous Parts and Accessories (Continued)

Description	Model or Part Number
Touch-up Paint	
Dove gray (*for use on frame around front panel and painted portion of handles*)	6010-1146
French gray (*for use on cover)*	6010-1147
Parchment white (*for use on rack mount flanges, rack support flanges, and front panels*)	6010-1148

7 Repair and Replacement Procedures

Information in This Chapter

This chapter contains procedures for removing and replacing the major assemblies of your Agilent Technologies PNA series microwave network analyzer.

Chapter Seven at-a-Glance

Section Title	Summary of Content	Start Page
Personal Safety Warnings	Warnings and cautions pertaining to personal safety.	Page 7-3
Electrostatic Discharge (ESD) Protection	Information pertaining to ESD protection.	Page 7-3
Assembly Replacement Sequence	The proper assembly replacement sequence for your analyzer.	Page 7-4
Table of Removal and Replacement Procedures	A table of removal and replacement procedures and the corresponding page number where they are located.	Page 7-5
Removal and Replacement Procedures	The actual procedures for removing and replacing the major assemblies in your analyzer. *The procedures occur in assembly reference designator numerical order.*	See Table 7-1 on page 7-5 for specific procedures.
Post-Repair Procedures	A table for the proper tests, verifications, and adjustments to perform on your analyzer after repair.	Page 7-56

Personal Safety Warnings

WARNING **These servicing instructions are for use by qualified personnel only. To avoid electrical shock, do not perform any servicing unless you are qualified to do so.**

WARNING **The opening of covers or removal of parts is likely to expose dangerous voltages. Disconnect the analyzer from all voltage sources while it is being opened.**

WARNING **Procedures described in this document may be performed with power supplied to the product while protective covers are removed. Energy available at many points may, if contacted, result in personal injury.**

WARNING **The power cord is connected to internal capacitors that may remain live for 10 seconds after disconnecting the plug from its power supply assembly. Wait at least 10 seconds, after disconnecting the plug, before removing the covers.**

WARNING **The detachable power cord is the instrument disconnecting device. It disconnects the mains circuits from the mains supply before other parts of the instrument. The front panel switch is only a standby switch and is not a LINE switch (disconnecting device).**

WARNING **Danger of explosion if battery is incorrectly replaced. Replace only with the same or equivalent type recommended. Discard used batteries according to manufacturer's instructions.**

Electrostatic Discharge (ESD) Protection

CAUTION Many of the assemblies in this instrument are very susceptible to damage from electrostatic discharge (ESD). Perform the following procedures only at a static-safe workstation and wear a grounded wrist strap.

This is important. If not properly protected against, electrostatic discharge can seriously damage your analyzer, resulting in costly repair.

To reduce the chance of electrostatic discharge, follow all of the recommendations outlined in "Electrostatic Discharge Protection" on page 1-6, for all of the procedures in this chapter.

Assembly Replacement Sequence

The following steps show the sequence that you should follow to replace an assembly in the network analyzer.

Step 1. Identify the faulty group. Begin with Chapter 4, "Troubleshooting."

Step 2. Order a replacement assembly. Refer to Chapter 6, "Replaceable Parts."

Step 3. Replace the faulty assembly and determine what adjustments are necessary. Refer to "Post-Repair Procedures" in this chapter.

Step 4. Perform the necessary adjustments. Refer to Chapter 3, "Tests and Adjustments."

Step 5. Perform the necessary performance tests. Refer to Chapter 3, "Tests and Adjustments."

Removal and Replacement Procedures

Table 7-1 List of Procedures

Reference Designator	Assembly Description	Location
None	Covers, outer and inner	Page 7-6
None	Display inverter board Display lamp	Page 7-12
None	DC block (Options 146 and 246)	Page 7-42
None	Front panel assembly	Page 7-8
None	Limiter (Options 146 and 246)	Page 7-42
None	Midweb and fans	Page 7-53
None	Plenum bracket	Page 7-16
None	USB hub (part of A16 test set motherboard procedure)	Page 7-26
A1 A2 A3	Keypad assembly Display assembly Front panel interface board	Page 7-10
A4	Power supply assembly	Page 7-14
A5 A6, A8 A7, A9 A10	SPAM board Multiplier boards Fractional-N synthesizer boards Frequency reference board	Page 7-16
A11	Vertical motherboard (Options 146 and 246)	Page 7-18
A12 A13	Multiplier board (Options 146 and 246) Fractional-N synthesizer board (Options 146 and 246)	Page 7-20
A14	System motherboard	Page 7-22
A15	CPU board	Page 7-24
A16	Test set motherboard	Page 7-26
A17	QABC board (Options 146 and 246)	Page 7-28
A18	MASS 26.5 (MASSQuad) (Options 146 and 246)	Page 7-30
A19	MASS 26.5 (MASSQuad)	Page 7-32
A20	Mixer brick (QuintBrick)	Page 7-34
A21 A22 A23 A24	Test port 1 coupler Test port 2 coupler Test port 3 coupler Test port 4 coupler	Page 7-36
A25	60-dB source step attenuator (Option 1E1)	Page 7-38
A26	60-dB source step attenuator (Options 146 and 246)	Page 7-40
A29	Reference switch (Options 146 and 246)	Page 7-42
A40	Floppy disk drive	Page 7-44
A41	Hard disk drive	Page 7-46

Removing the Covers

Tools Required

- T-10 TORX driver (set to 9 in-lb)
- T-20 TORX driver (set to 21 in-lb)

Removing the Outer Cover

CAUTION This procedure is best performed with the analyzer resting on its front handles in the vertical position. *Do not place the analyzer on its front panel without the handles.* This will damage the front panel assemblies.

Refer to Figure 7-1 for this procedure.

1. Disconnect the power cord.
2. With a T-20 TORX driver, remove the strap handles (item ①) by loosening the screws (item ②) on both ends until the handle is free of the analyzer.
3. With a T-20 TORX driver, remove the four rear panel feet (item ③) by removing the center screws (item ④).
4. Slide the four bottom feet (item ⑤) off the cover.
5. Slide the cover off of the frame.

Removing the Inner Cover

Refer to Figure 7-1 for this procedure.

1. With a T-10 TORX driver, remove the cover attachment screws (item ⑥).
2. Lift off the cover.

Replacement Procedure

Reverse the order of the removal procedures.

Use the tools specified for all mounting screws.

Figure 7-1 Outer and Inner Cover Removal

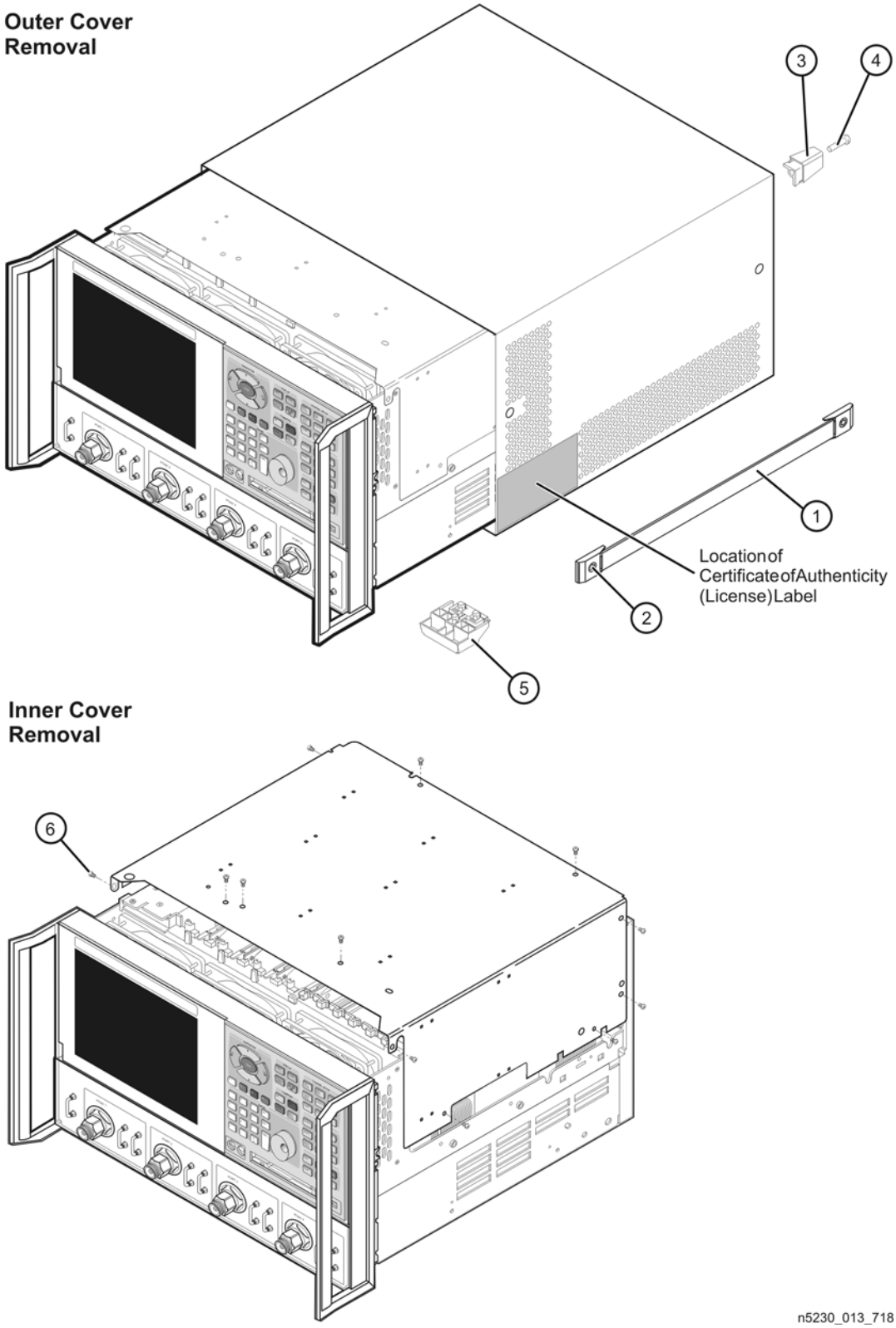

Removing and Replacing the Front Panel Assembly

Tools Required

- T-10 TORX driver (set to 9 in-lb)
- T-20 TORX driver (set to 21 in-lb)
- 5/16 inch open-end torque wrench (set to 10 in-lb)
- ESD grounding wrist strap

Removal Procedure

Refer to Figure 7-2 for this procedure.

1. Disconnect the power cord.
2. Remove the outer cover. Refer to "Removing the Covers" on page 7-6.
3. With a 5/16 inch torque wrench, remove all the semirigid jumpers (item ①) from the front panel (Option 014 only).
4. With a T-10 TORX driver, remove the eight screws (item ②) from the sides of the frame.

CAUTION Before removing the front panel from the analyzer, lift and support the front of the analyzer frame.

5. Slide the front panel over the test port connectors.
6. Disconnect the front panel interface ribbon cable (item ③).

   The front panel is now free from the analyzer.

Replacement Procedure

CAUTION When replacing the front panel, align the power switch and the floppy disk drive to their corresponding front panel cutouts.

IMPORTANT When reconnecting semirigid cables, torque the cable connectors to 10 in-lb.

1. Reverse the order of the removal procedure.

   Use the tools specified for all cable connections and mounting screws.
2. Perform the post-repair adjustments, verifications, and performance tests that pertain to this removal procedure. Refer to Table 7-2 on page 7-56.

Figure 7-2 Front Panel Assembly Removal

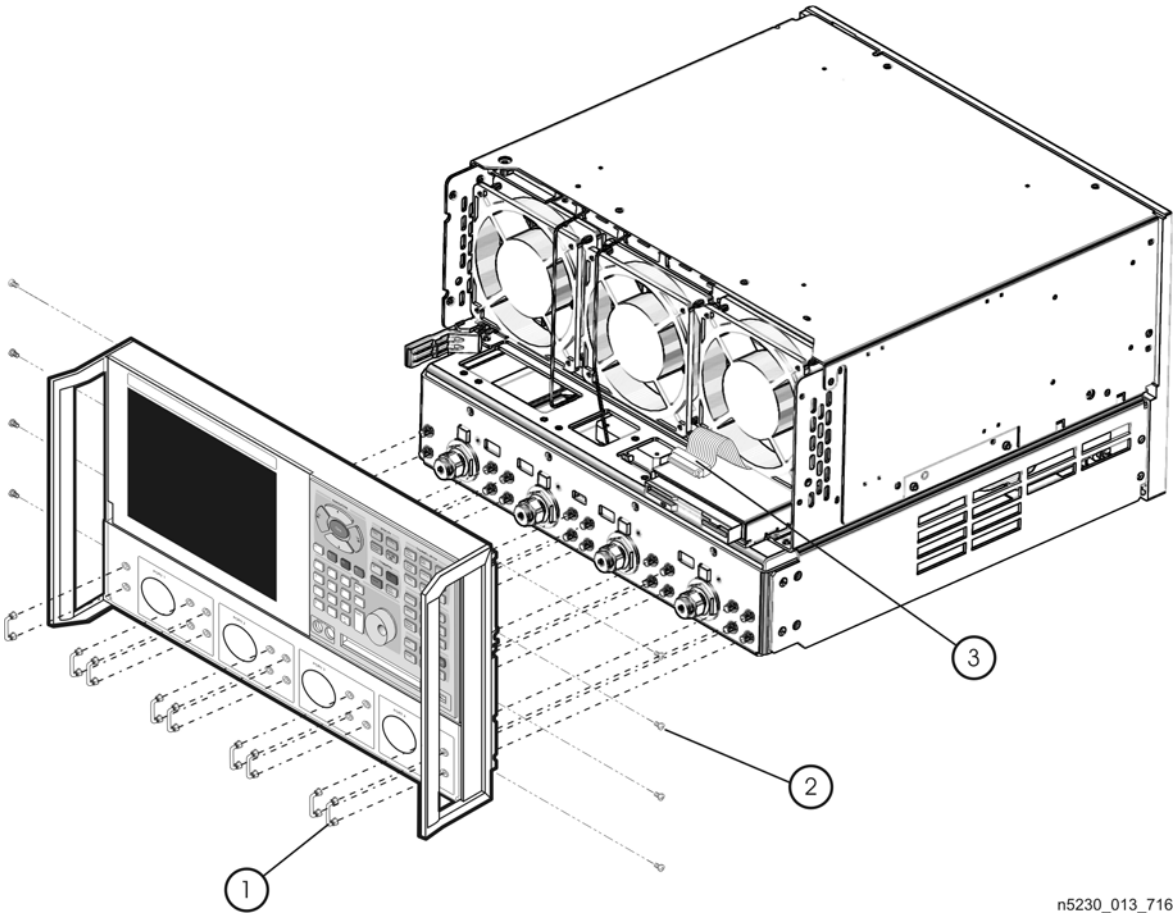

Removing and Replacing Front Panel Subassemblies

Tools Required

- T-10 TORX driver (set to 9 in-lb)
- T-20 TORX driver (set to 21 in-lb)
- 5/16 inch open-end torque wrench (set to 10 in-lb)
- ESD grounding wrist strap

Refer to Figure 7-3 for the following procedures.

Pre-removal Procedure

1. Disconnect the power cord.
2. Remove the front panel assembly. Refer to "Removing and Replacing the Front Panel Assembly" on page 7-8.
3. Disconnect the display ribbon cable (item ①) and the display lamp cable (item ②) from the A3 front panel interface board.

Removing the A2 Display Assembly

1. With a T-10 TORX driver, remove the four retaining screws (item ③) from the display assembly.
2. Remove the display assembly from the front panel.

Removing the A3 Front Panel Interface Board

1. Remove the round knob (RPG) from the front panel by gently pulling the knob forward.
2. With a T-10 TORX driver, remove the seven screws (item ④) from the front panel interface board.
3. From the bottom of the frame, lift the A3 front panel interface board up at an angle until the board clears the frame. Disconnect the keypad ribbon cable (item ⑤) from the A3 front panel interface board and lift out the board.

Removing the A1 Keypad Assembly

1. Remove the A3 front panel interface board as instructed above.
2. From the rear of the front panel assembly, remove the center retaining screw (item ⑥). Bend the bottom keypad assembly tabs away from the frame and push the A1 keypad assembly out of the frame.

Replacement Procedure

NOTE When replacing the assemblies, ensure that the ribbon cables are not under the assemblies.

1. Reverse the order of the removal procedure.

   Use the tools specified for all cable connections and mounting screws.

2. Perform the post-repair adjustments, verifications, and performance tests that pertain to this removal procedure. Refer to Table 7-2 on page 7-56.

Figure 7-3 Front Panel Subassemblies Removal

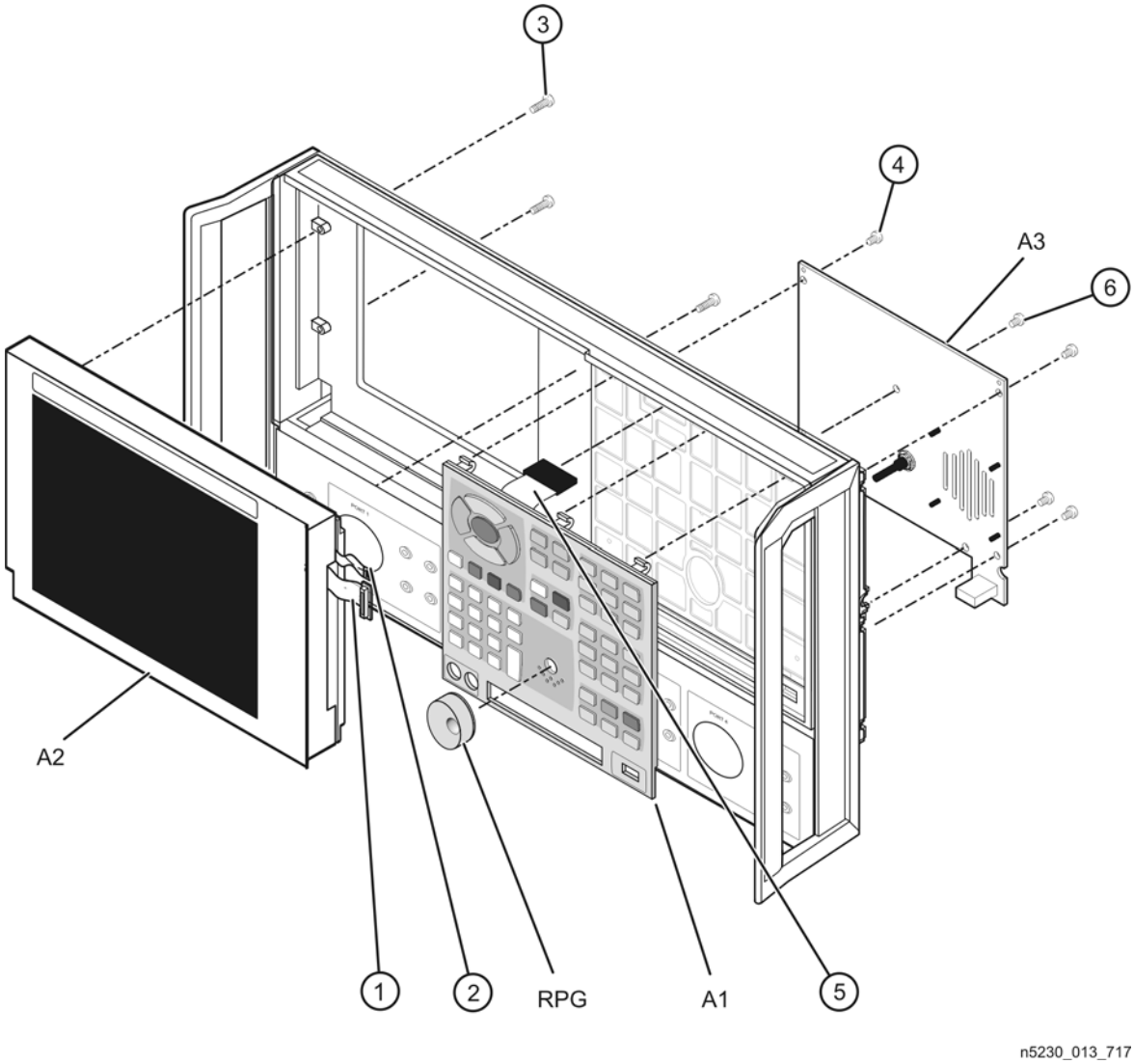

Removing and Replacing the Display Inverter Board and the Display Lamp

Tools Required

- T-10 TORX driver (set to 9 in-lb)
- T-20 TORX driver (set to 21 in-lb)
- Small jeweler's screwdriver
- 5/16 inch open-end torque wrench (set to 10 in-lb)
- ESD grounding wrist strap

Pre-removal Procedure

1. Disconnect the power cord.
2. Remove the front panel assembly. Refer to "Removing and Replacing the Front Panel Assembly" on page 7-8.
3. Remove the display assembly. Refer to "Removing the A2 Display Assembly" on page 7-10.

Removing the Display Inverter Board

Refer to Figure 7-4 for this procedure.

1. Disconnect the ribbon cable (item ①) and the display lamp cable (item ②) from the display inverter board.
2. Lift the inverter retention tabs (item ③) with slight pressure and rotate the display inverter board (item ④).
3. Lift the display inverter board (item ④) out of the slot.

NOTE Stop now if you are only removing the display inverter board. Replace the board and reverse the removal procedure.

Removing the Display Lamp

Refer to Figure 7-4 for this procedure.

1. Remove the display lamp cable (item ②) from the display inverter board (item ④).
2. With a T-10 TORX driver, remove the four screws (item ⑤) on the display back panel and then lift the panel off.
3. Remove the four display bumpers (item ⑥).
4. To gain access to the display lamp, rotate the top of the display outward slightly.

NOTE To avoid dust or dirt particles from getting in between the display glass and the display, do not completely take out the display.

5. Remove the two screws (item ⑦) from the display with the jeweler's screwdriver. Slide the lamp enclosure up to remove it.
6. Remove the display lamp (item ⑧).

Replacement Procedure

1. Reverse the order of the removal procedure.

   Use the tools specified for all cable connections and mounting screws.
2. Perform the post-repair adjustments, verifications, and performance tests that pertain to this removal procedure. Refer to Table 7-2 on page 7-56.

Figure 7-4 Display Inverter Board and Display Lamp Removal

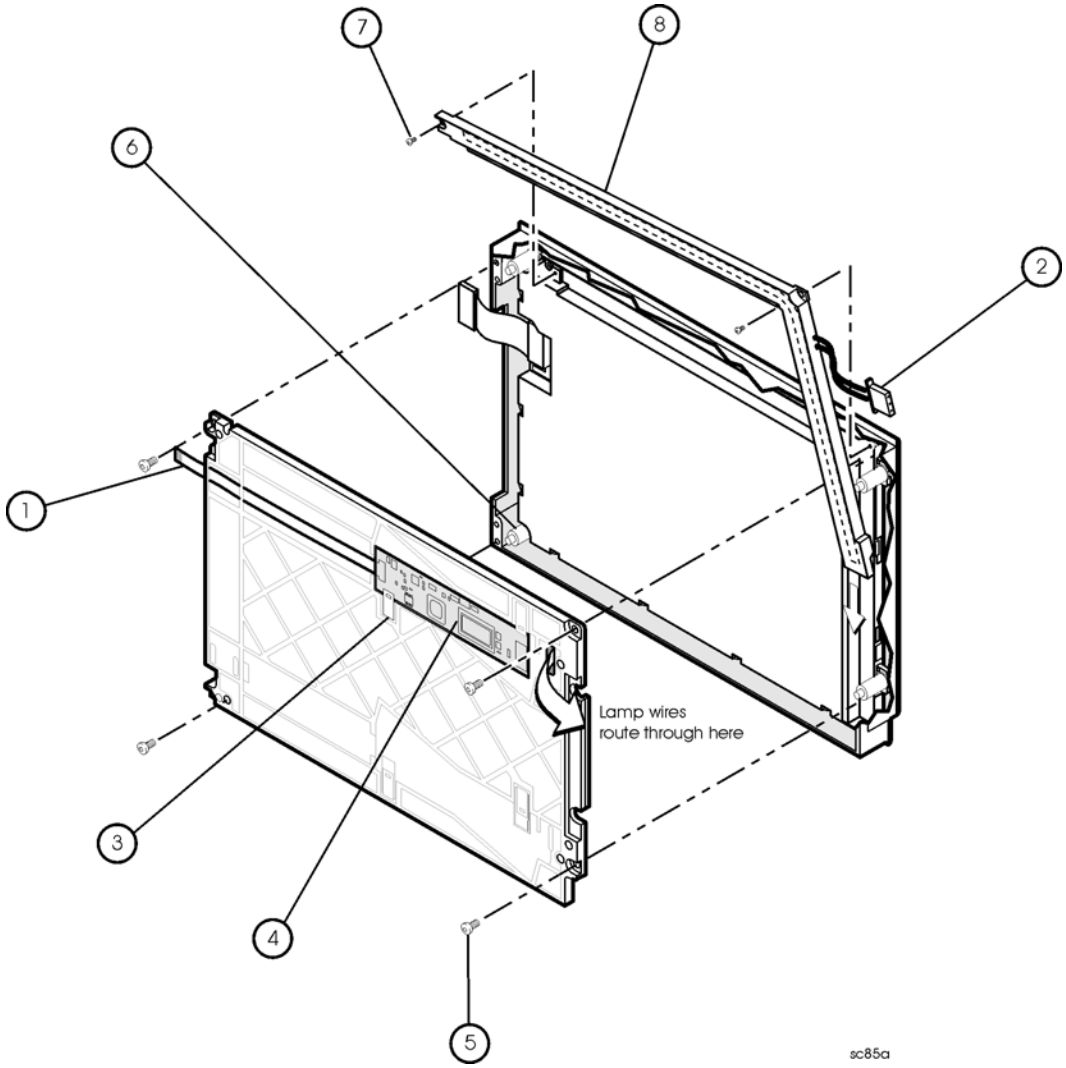

Removing and Replacing the A4 Power Supply Assembly

Tools Required

- T-10 TORX driver (set to 9 in-lb)
- T-20 TORX driver (set to 21 in-lb)
- ESD grounding wrist strap

Removal Procedure

Refer to Figure 7-5 for this procedure.

1. Disconnect the power cord.
2. Remove the outer and inner covers. Refer to "Removing the Covers" on page 7-6.
3. With a T-10 TORX driver, remove the five screws (item ①) from the power supply assembly.
4. Lift out and remove the A4 power supply assembly.

Replacement Procedure

1. Reverse the order of the removal procedure.

   Use the tools specified for all cable connections and mounting screws.
2. Perform the post-repair adjustments, verifications, and performance tests that pertain to this removal procedure. Refer to Table 7-2 on page 7-56.

Figure 7-5 A4 Power Supply Assembly Removal

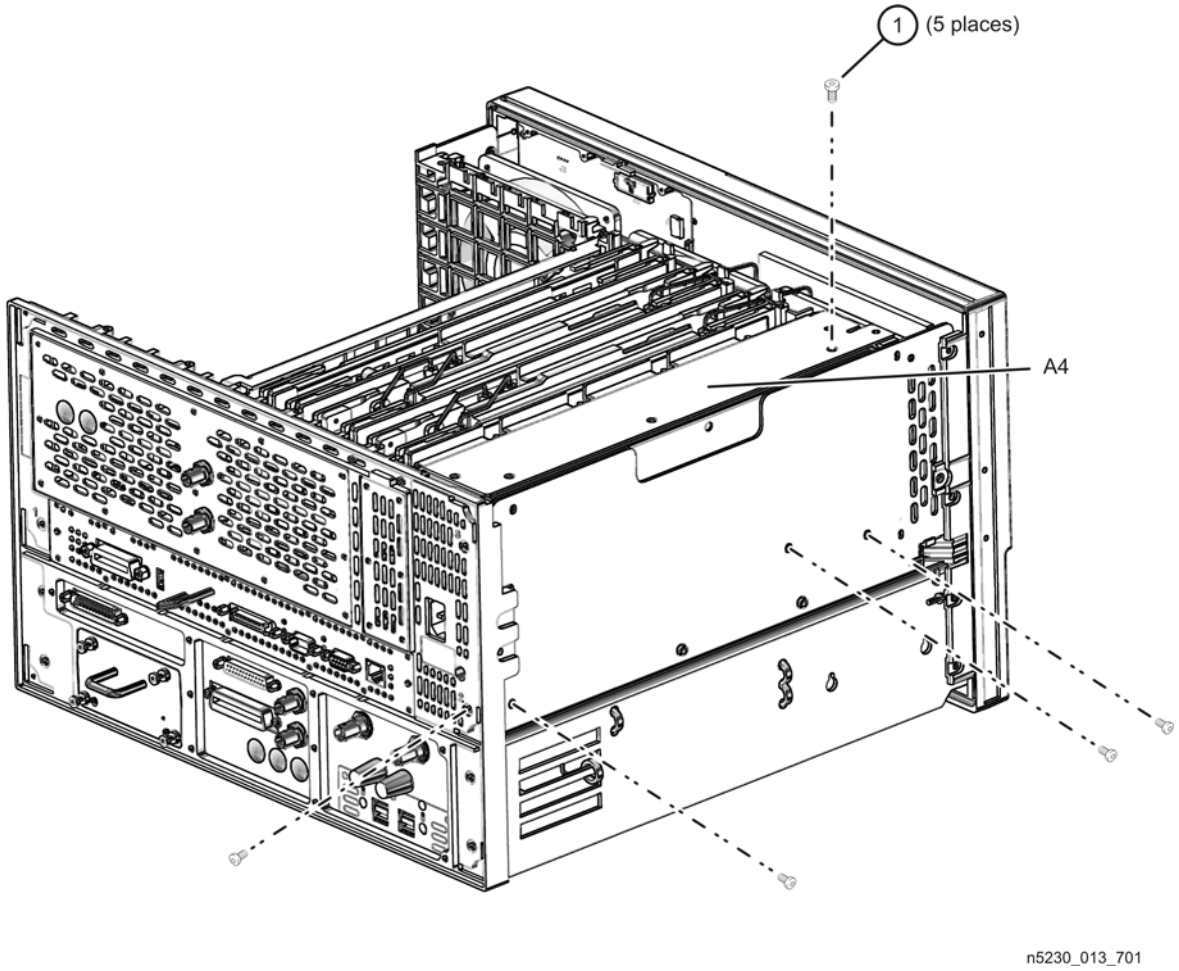

Removing and Replacing the A5 through A10 Boards

Tools Required

- T-10 TORX driver (set to 9 in-lb)
- T-20 TORX driver (set to 21 in-lb)
- ESD grounding wrist strap

Removal Procedure

Refer to Figure 7-6 for this procedure.

1. Disconnect the power cord.
2. Remove the outer and inner covers. Refer to "Removing the Covers" on page 7-6.
3. With a T-10 TORX driver, remove the cable hold down wire that secures cables to the top of the midweb by removing the attachment screw (item ①).
4. Remove any or all of the A5 through A10 boards:
   a. Identify the board you want to remove and disconnect any cables that are attached to it.

NOTE Before removing the board completely, check the bottom of the board for any attached cables and disconnect them.

   b. While holding onto the extractors (item ②), slide the board out of the slot and remove it from the analyzer.

Replacement Procedure

1. Reverse the order of the removal procedure. When reinstalling the cable hold down wire, be sure that all cables are positioned so that they will not be pinched.

   Use the tools specified for all cable connections and mounting screws.
2. Perform the post-repair adjustments, verifications, and performance tests that pertain to this removal procedure. Refer to Table 7-2 on page 7-56.

Figure 7-6 A5 through A10 Board Assemblies Removal

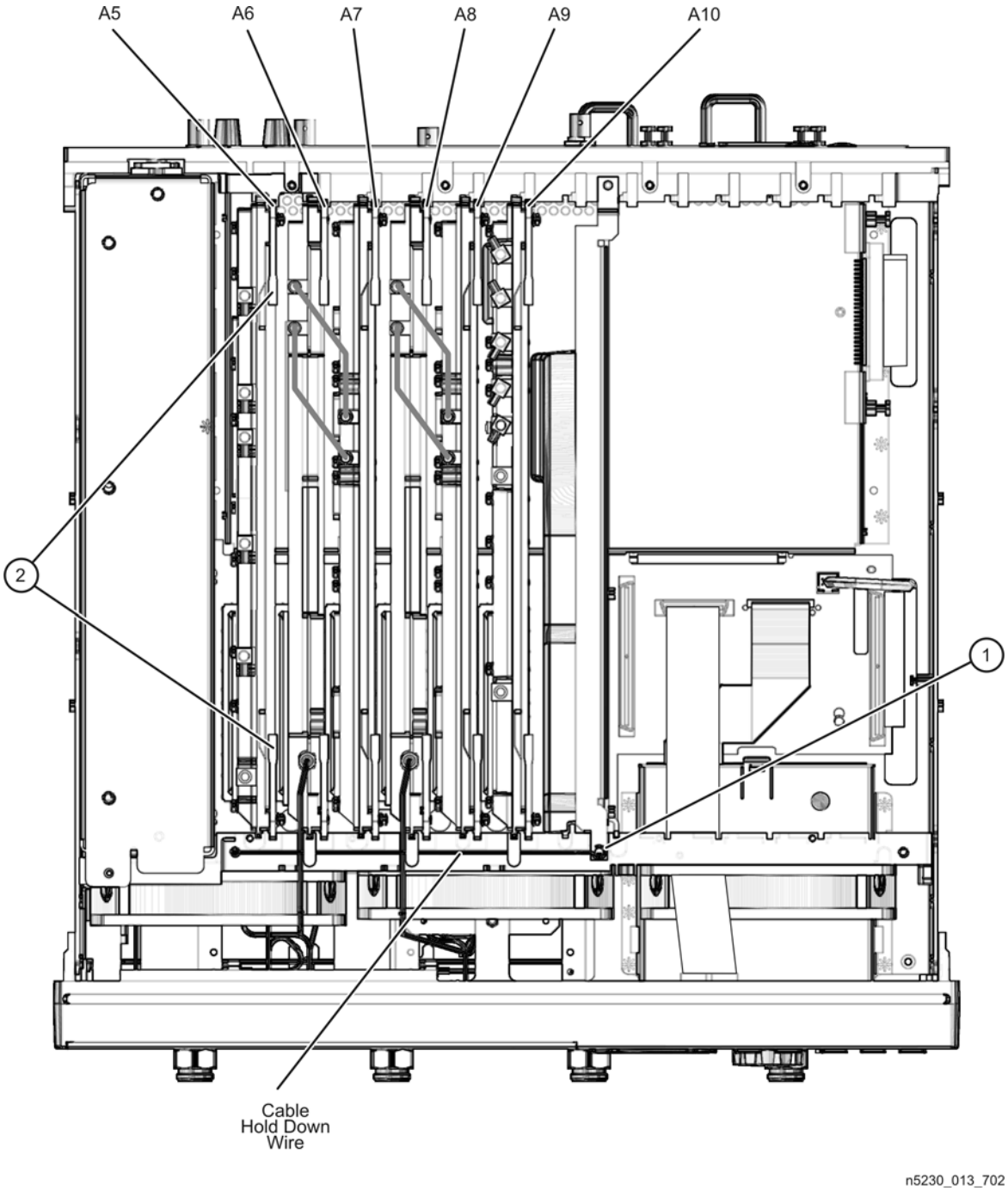

Removing and Replacing the A11 Vertical Motherboard and the Plenum Bracket

Tools Required

- T-10 TORX driver (set to 9 in-lb)
- T-20 TORX driver (set to 21 in-lb)
- ESD grounding wrist strap

Removal Procedure

Refer to Figure 7-7 for this procedure.

1. Disconnect the power cord.
2. Remove the outer and inner covers. Refer to "Removing the Covers" on page 7-6.
3. Remove the A12 multiplier and A13 fractional-N synthesizer boards. Refer to "Removing and Replacing the A12 Multiplier and the A13 Fractional-N Synthesizer Boards" on page 7-20.
4. Remove the A17 QABC board. Refer to "Removing and Replacing the A17 QABC Board" on page 7-28.
5. Remove the A11 vertical motherboard:
   a. Remove the six mounting screws (item ①) from the A11 vertical motherboard.
   b. Lift the A11 vertical motherboard out of the A14 system motherboard connector and remove it from the analyzer.
6. Remove the plenum bracket:
   a. Remove the two screws (item ②) holding the plenum bracket in place.
   b. Remove the plenum bracket from the analyzer.

Replacement Procedure

1. Reverse the order of the removal procedure. If the plenum bracket was removed, reinstall it first and leave the attachment screws loose until the A11 vertical motherboard has been securely fastened.

   Use the tools specified for all mounting screws.
2. Perform the post-repair adjustments, verifications, and performance tests that pertain to this removal procedure. Refer to Table 7-2 on page 7-56.

Figure 7-7 A11 Vertical Motherboard and Plenum Bracket Removal

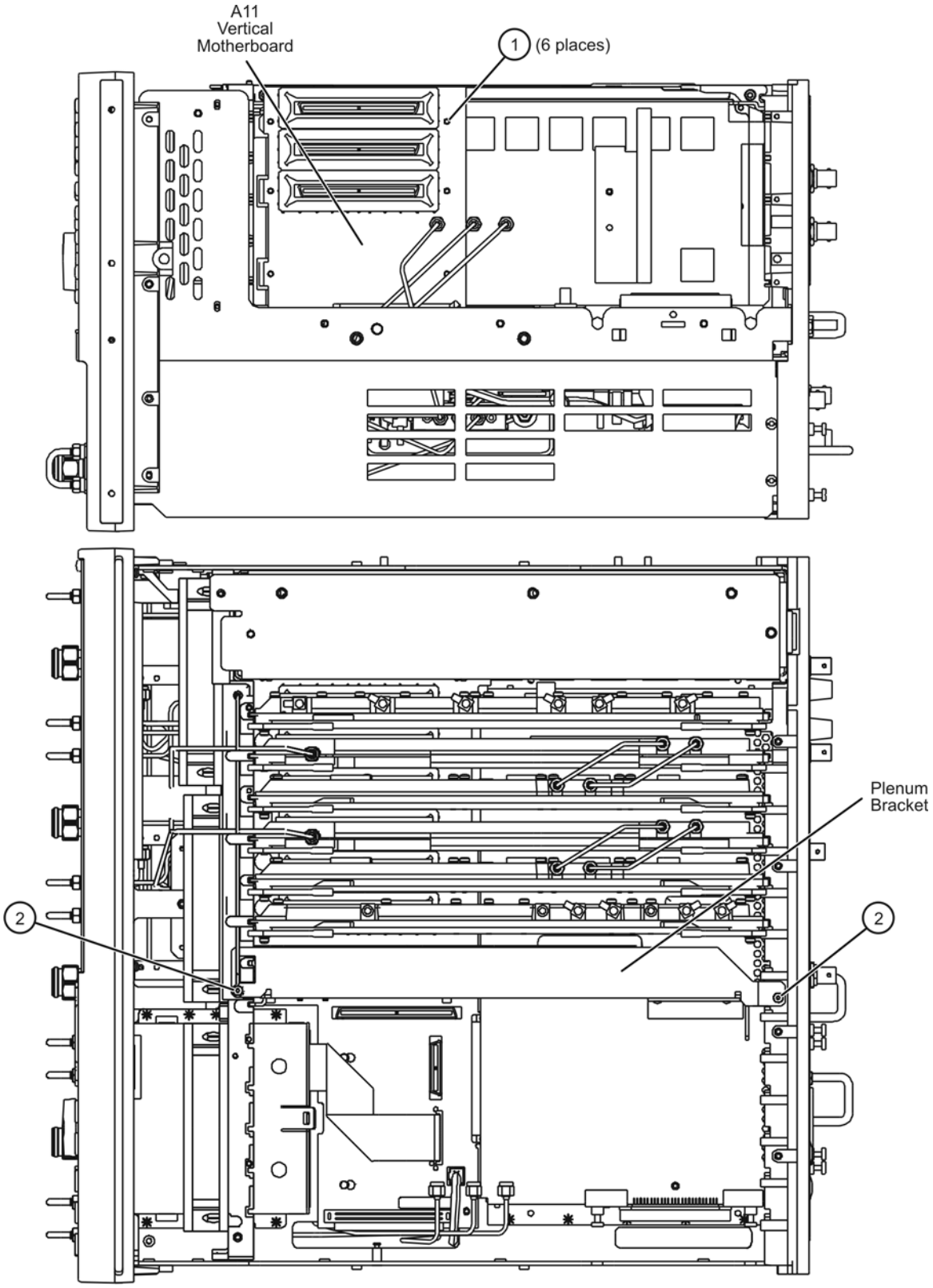

Removing and Replacing the A12 Multiplier and the A13 Fractional-N Synthesizer Boards

Tools Required

- T-10 TORX driver (set to 9 in-lb)
- T-20 TORX driver (set to 21 in-lb)
- 5/16 inch open-end torque wrench (set to 10 in-lb)
- ESD grounding wrist strap

Removal Procedure

Refer to Figure 7-8 for this procedure.

1. Disconnect the power cord.
2. Remove the outer and inner covers. Refer to "Removing the Covers" on page 7-6.
3. The A13 fractional-N synthesizer board must be removed before the A12 multiplier board can be removed.
4. Remove the A13 fractional-N synthesizer board:
   a. Disconnect cable W73 from the A17 QABC board. This cable is attached to the bottom of the A13 fractional-N synthesizer board.
   b. Remove jumper cables W61 and W62 and slide the A13 fractional-N synthesizer board out of the analyzer being careful not to damage any adjacent components.
5. Remove the A12 multiplier board:
   a. Disconnect cable W63 and, while holding this cable out of the way, slide the A12 multiplier board out of the analyzer. Be careful not to over bend the W63 cable.

Replacement Procedure

1. Reverse the order of the removal procedure. Be especially careful not to damage cable W63.

   Use the tools specified for all cable connections and mounting screws.
2. Perform the post-repair adjustments, verifications, and performance tests that pertain to this removal procedure. Refer to Table 7-2 on page 7-56.

Figure 7-8 A12 Multiplier and A13 Fractional-N Synthesizer Boards Removal

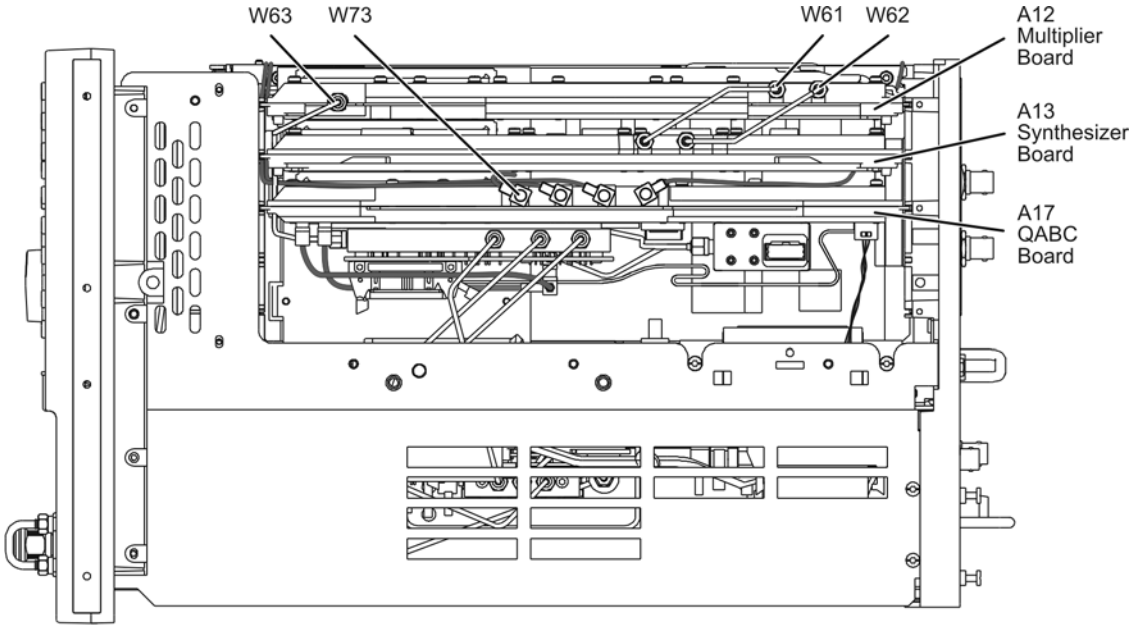

n5230_013_724

Removing and Replacing the A14 System Motherboard

Tools Required

- T-10 TORX driver (set to 9 in-lb)
- T-20 TORX driver (set to 21 in-lb)
- 5/16 inch open-end torque wrench (set to 10 in-lb)
- ESD grounding wrist strap

Removal Procedure

Refer to Figure 7-9 for this procedure.

1. Disconnect the power cord.
2. Remove the outer and inner covers. Refer to "Removing the Covers" on page 7-6.
3. Remove the front panel assembly. Refer to "Removing and Replacing the Front Panel Assembly" on page 7-8.
4. Remove the A4 power supply assembly. Refer to "Removing and Replacing the A4 Power Supply Assembly" on page 7-14.
5. Remove the A5 through A10 boards and the plenum bracket. Refer to "Removing and Replacing the A5 through A10 Boards" on page 7-16.
6. Remove the A12 multiplier and A13 fractional-N synthesizer boards. Refer to "Removing and Replacing the A12 Multiplier and the A13 Fractional-N Synthesizer Boards" on page 7-20.
7. Remove the A17 QABC board. Refer to "Removing and Replacing the A17 QABC Board" on page 7-28.
8. Remove the A11 vertical motherboard. Refer to "Removing and Replacing the A11 Vertical Motherboard and the Plenum Bracket" on page 7-18.
9. Remove the A15 CPU board. Refer to "Removing and Replacing the A15 CPU Board" on page 7-24.
10. Remove the Midweb. Refer to "Removing and Replacing the Midweb and the B1 Fan" on page 7-53.
11. Disconnect the A1 front panel ribbon cable (item ①), the A40 floppy disk drive ribbon cable (item ②), the A16 test set motherboard ribbon cable (item ③), and the USB cable (item ④) from the A14 system motherboard.
12. Lift the tab at the rear of the A40 floppy disk drive enclosure and remove the enclosure rear cover. Fold the disk drive ribbon cable (item ②), with the rear cover, back over the disk drive enclosure so that they do not interfere with removing the A14 system motherboard.
13. Remove the four screws (item ⑤) that secure the A14 system motherboard.
14. Lift the A14 system motherboard out of the analyzer being careful not to damage any adjacent components.

Replacement Procedure

1. Reverse the order of the removal procedure.

   Use the tools specified for all cable connections and mounting screws.

2. Perform the post-repair adjustments, verifications, and performance tests that pertain to this removal procedure. Refer to Table 7-2 on page 7-56.

Figure 7-9 A14 System Motherboard Removal

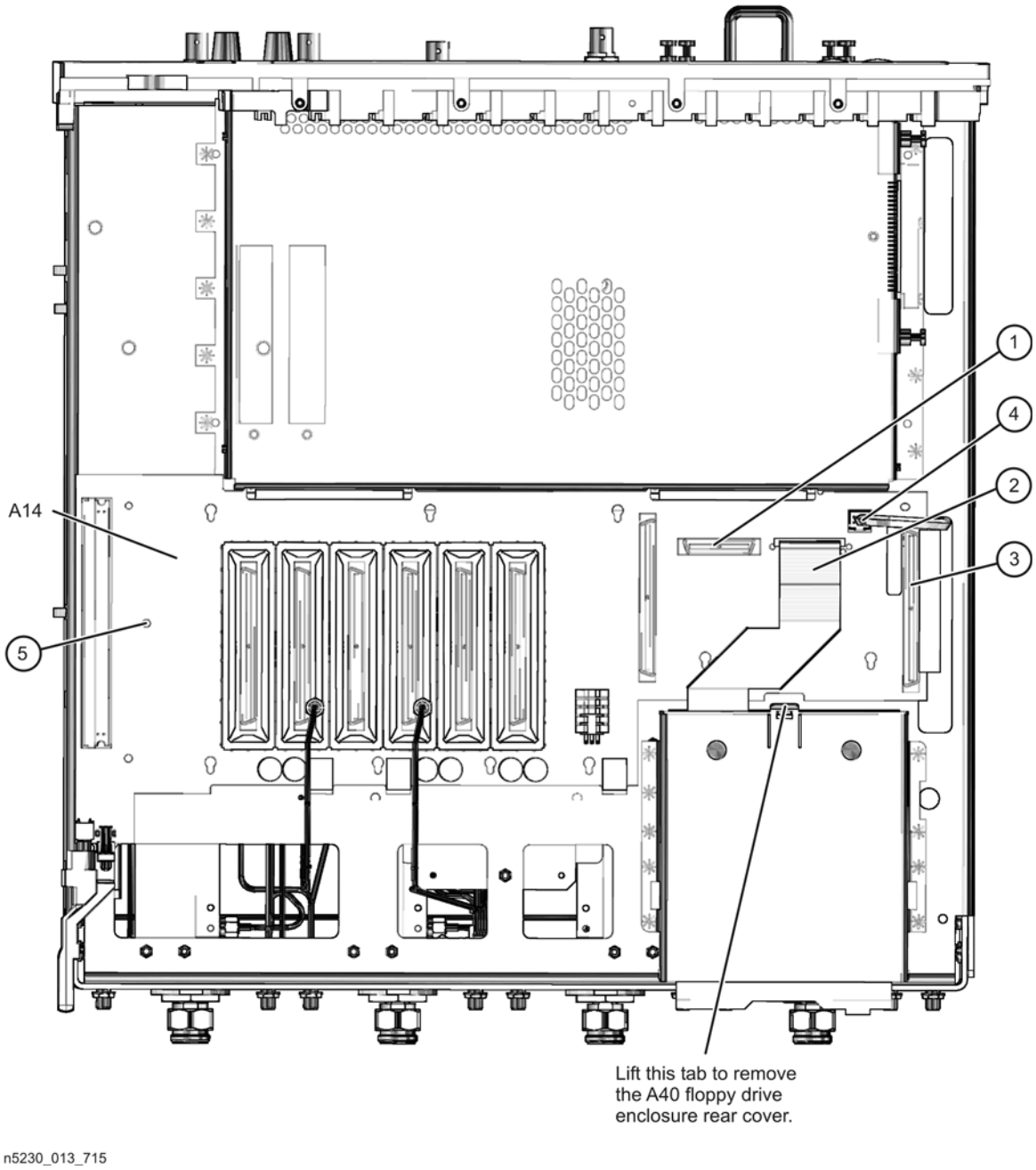

Removing and Replacing the A15 CPU Board

Tools Required

- T-10 TORX driver (set to 9 in-lb)
- T-20 TORX driver (set to 21 in-lb)
- ESD grounding wrist strap

Removal Procedure

Refer to Figure 7-10 for this procedure.

1. Disconnect the power cord.
2. Remove the outer and inner covers. Refer to "Removing the Covers" on page 7-6.
3. Disconnect the hard disk drive assembly (HDDA) ribbon cable and interface board from the A15 CPU board by removing the two screws (item ①).
4. Disengage the A5 SPAM board from the A15 CPU board by performing the following steps.
   a. Lift the two extractors located at each end of the board.
   b. While holding onto the extractors, lift the board halfway out of the slot.
   c. Let the extractors drop to their normal position.
   d. Lower the board into the slot.

   The board should now rest above its normal seated position.
5. With a T-10 TORX driver, remove the 14 screws (item ②) from the rear panel of the A15 CPU board.
6. Gently pull on the finger grip (item ③) to disengage the A15 CPU board from the analyzer.
7. Slide the A15 CPU board out of the analyzer.

Replacement Procedure

1. Reverse the order of the removal procedure.

   Use the tools specified for all mounting screws.
2. If a new Certificate of Authenticity (license) label is supplied with your new A15 CPU board, adhere it to the outer cover in the location specified in Figure 7-1 on page 7-7.
3. Perform the post-repair adjustments, verifications, and performance tests that pertain to this removal procedure. Refer to Table 7-2 on page 7-56.

Figure 7-10 A15 CPU Board Removal

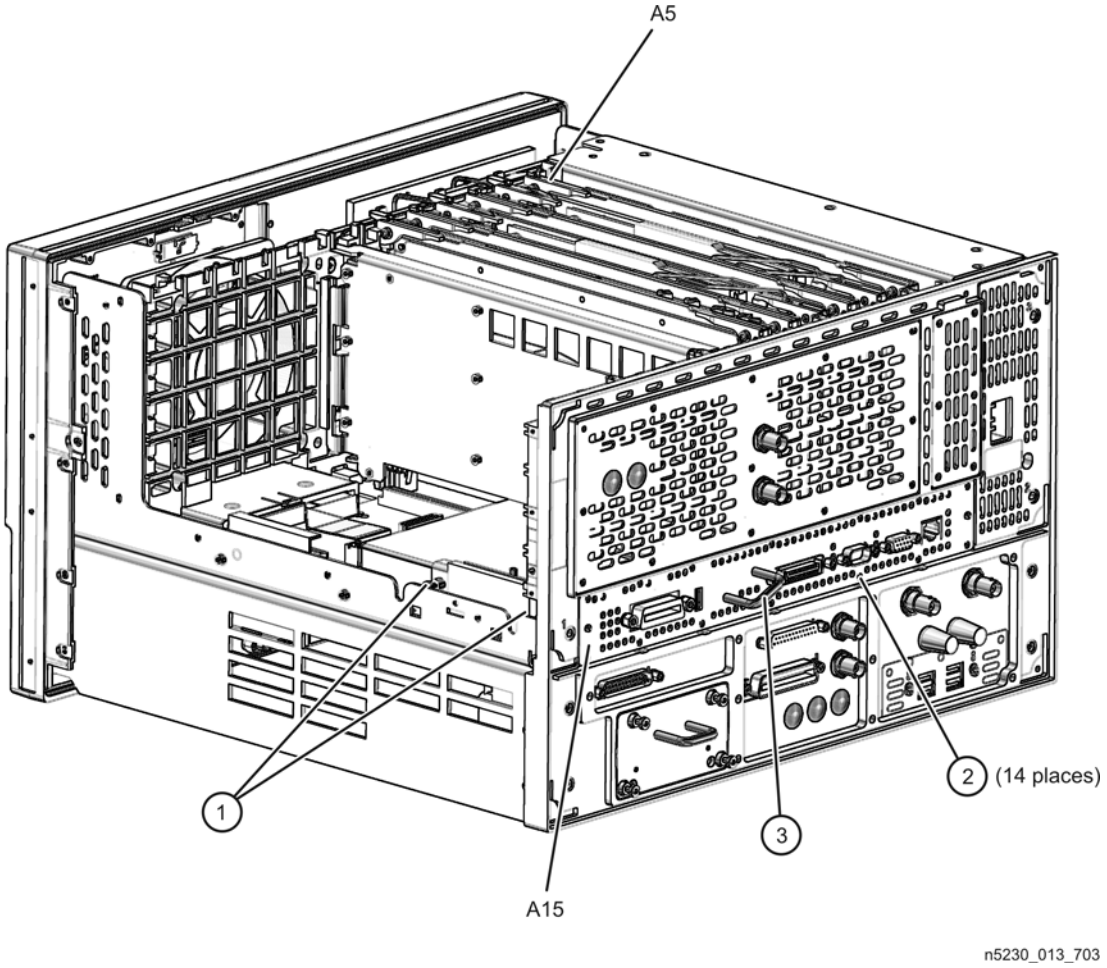

Removing and Replacing the A16 Test Set Motherboard and the USB Hub

Tools Required

- T-8 TORX driver (set to 5 in-lb)
- T-10 TORX driver (set to 9 in-lb)
- T-20 TORX driver (set to 21 in-lb)
- 5/16 inch open-end torque wrench (set to 10 in-lb)
- ESD grounding wrist strap

Removal Procedure

Refer to Figure 7-11 for this procedure.

1. Disconnect the power cord.
2. Remove the outer cover. Refer to "Removing the Covers" on page 7-6. Position the analyzer bottom side up.
3. Remove the A41 hard disk drive. Refer to "Removing and Replacing the A41 Hard Disk Drive" on page 7-46.
4. If your analyzer is an Option 146 or Option 246, the A29 reference switch (with its mounting bracket), DC block, and limiter must be removed and reinstalled on the new A16 test set motherboard. Refer to "Removing and Replacing the A29 Reference Switch, Limiter, and DC Block" on page 7-42.
5. Remove the hard disk drive shield (item ①) by loosening two attachment screws (item ②), using a T-10 TORX driver. These screws are accessible through holes in the side of the chassis.
6. Disconnect the ribbon cables (item ③) from the A16 test set motherboard:
7. Disconnect the wrapped-wire and flexible RF cables (item ④) from the A16 test set motherboard:
8. With a T-10 TORX driver, remove nine screws (item ⑤) from the rear panel and four screws (item ⑥) from the A16 test set motherboard.
9. Slide the A16 test set motherboard toward the front of the instrument to release the locking pins (item ⑦), then lift the motherboard and remove it from the analyzer.
10. To remove the USB hub, remove two screws (item ⑧), using a T-8 TORX driver.

Replacement Procedure

1. Reverse the order of the removal procedure.

   Use the tools specified for all mounting screws.
2. Perform the post-repair adjustments, verifications, and performance tests that pertain to this removal procedure. Refer to Table 7-2 on page 7-56.

Figure 7-11 A16 Test Set Motherboard Removal

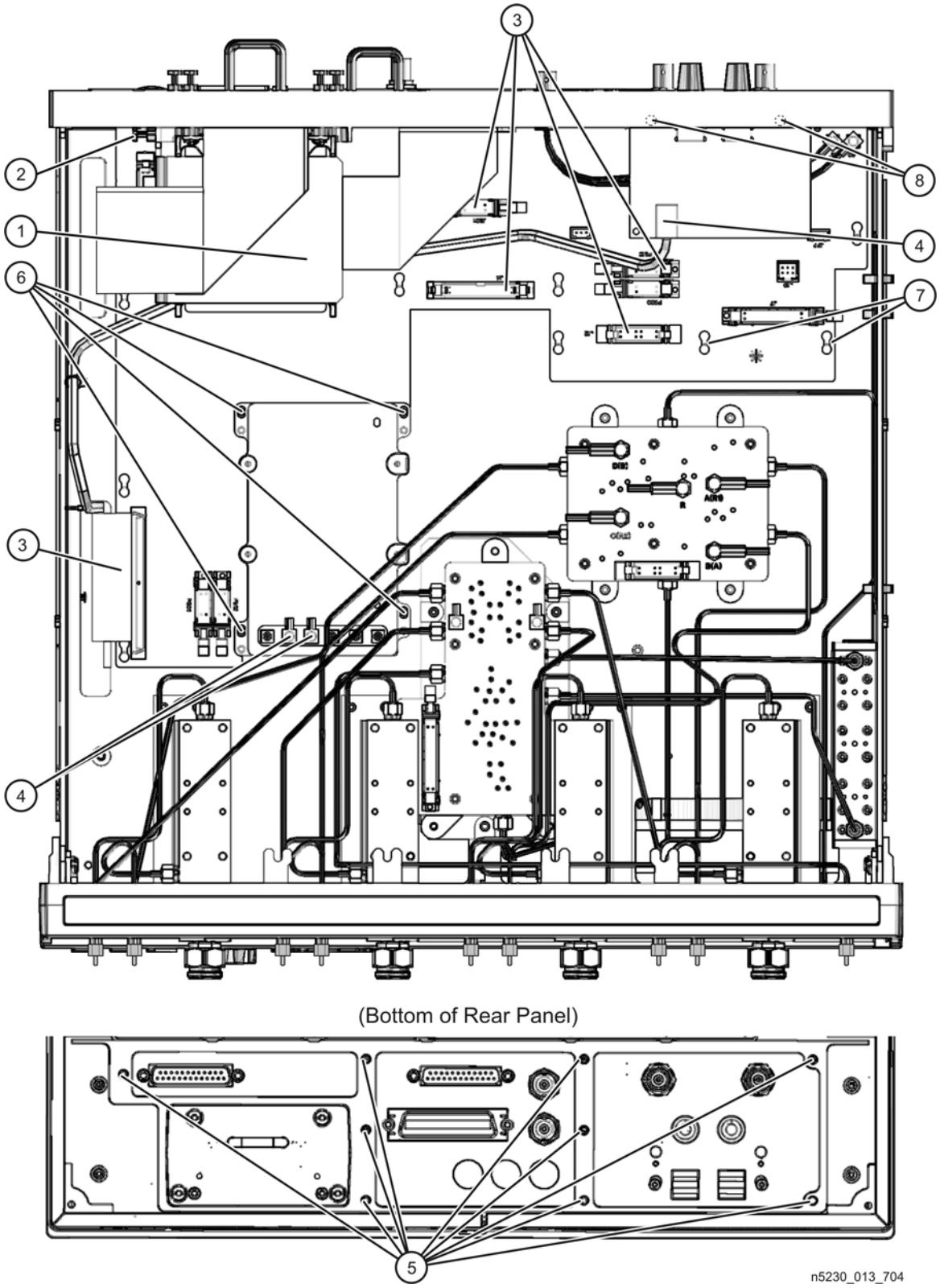

Removing and Replacing the A17 QABC Board

Tools Required

- T-10 TORX driver (set to 9 in-lb)
- T-20 TORX driver (set to 21 in-lb)
- 5/16 inch open-end torque wrench (set to 10 in-lb)
- ESD grounding wrist strap

Removal Procedure

Refer to Figure 7-12 for this procedure.

1. Disconnect the power cord.
2. Remove the outer and inner covers. Refer to "Removing the Covers" on page 7-6.
3. Remove the A12 multiplier board and the A13 fractional-N synthesizer board. Refer to "Removing and Replacing the A12 Multiplier and the A13 Fractional-N Synthesizer Boards" on page 7-20.
4. Remove the A17 QABC board:
   a. Disconnect cables W64, W65, W67. It may be necessary to loosen each of these cables at the other end to move them out of the way to remove the A17 QABC board.
   b. Disconnect flexible cables W70, W71, W72, and W73.
   c. Disconnect the A29 reference switch cable at A17J10.
   d. While holding cables W64, W65, and W67 out of the way, remove the A17 QABC board from the analyzer. Be careful not to damage cables W64, W65, and W67.
5. Remove the assemblies and cables from the A17 QABC board:
   a. Remove the A18 MASSQuad from the A17 QABC board. Refer to "Removing and Replacing the A18 MASS 26.5 (MASSQuad)" on page 7-30.
   b. Remove the A26 step attenuator from the A17 QABC board. Refer to "Removing and Replacing the A26 60-dB Source Step Attenuator" on page 7-40.
   c. Remove cables W74 and W75 from the A17 QABC board.
   d. Remove the retainer clips from cables W76 and W77 and remove cables W76 and W77 from the A17 QABC board.

Replacement Procedure

1. Reverse the order of the removal procedure, installing the assemblies and cables removed from the old A17 QABC board onto the new A17 QABC board. Be sure to reinstall the retainer clips on cables W76 and W77 in the locations indicated.

   Use the tools specified for all cable connections and mounting screws.
2. Perform the post-repair adjustments, verifications, and performance tests that pertain to this removal procedure. Refer to Table 7-2 on page 7-56.

Figure 7-12 A17 QABC Board Removal

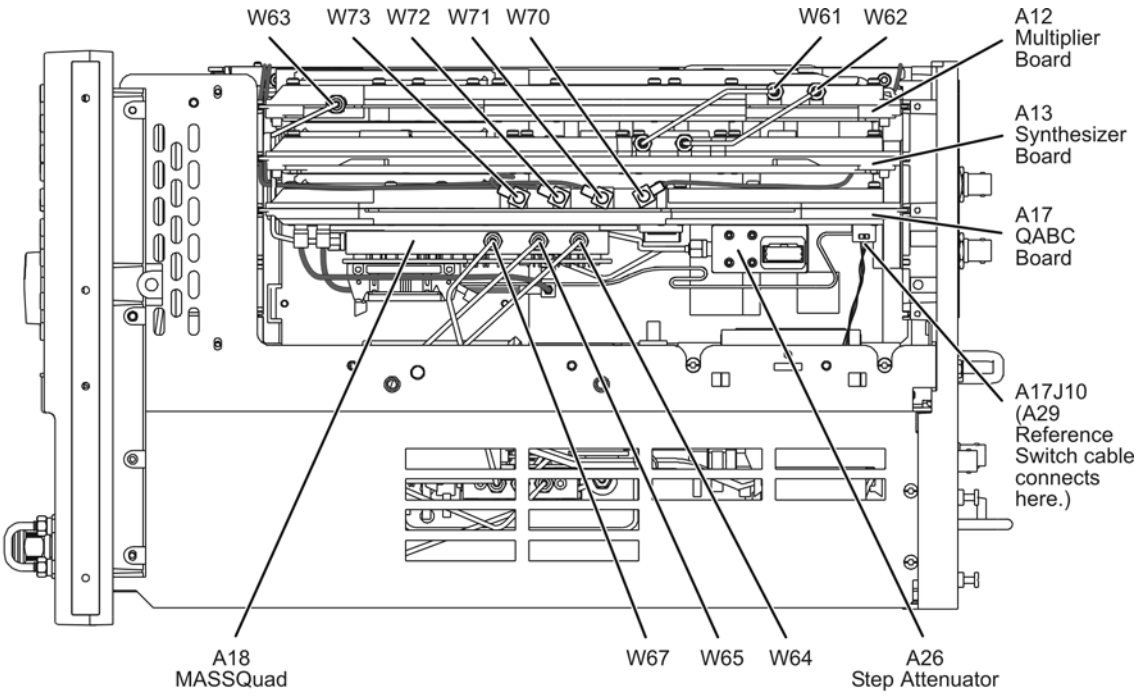

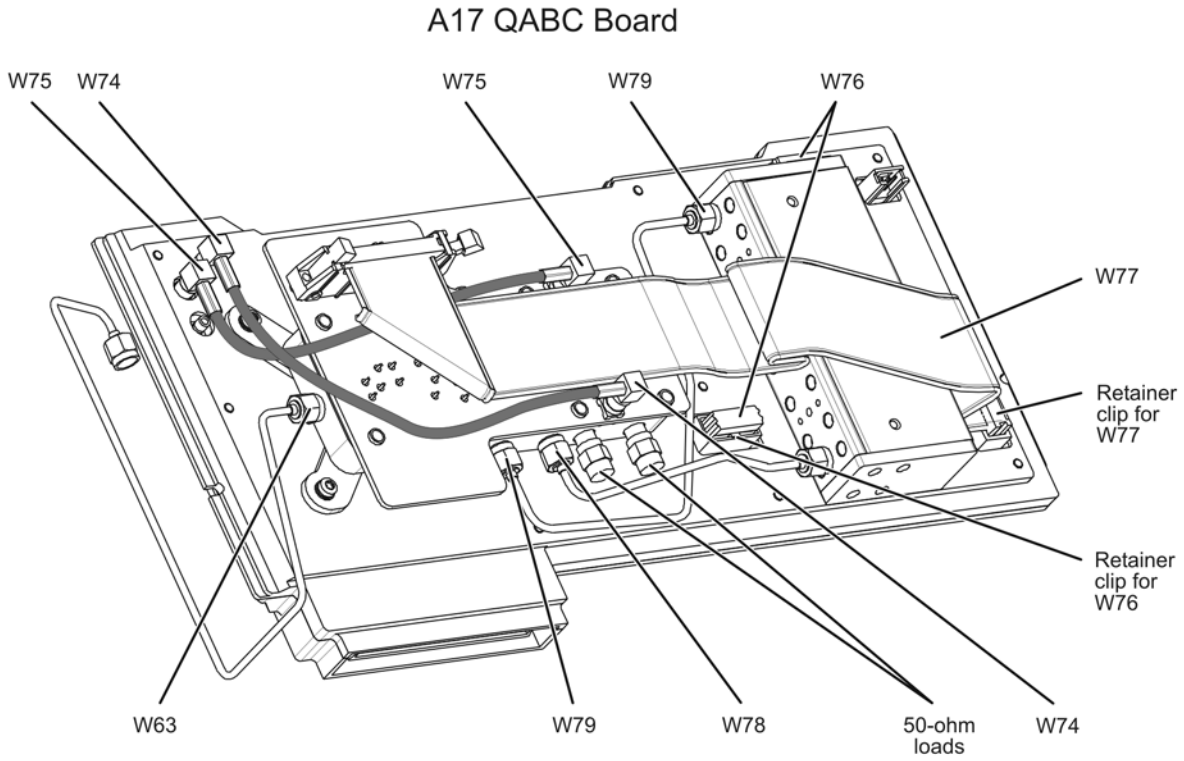

Removing and Replacing the A18 MASS 26.5 (MASSQuad)

Tools Required

- T-10 TORX driver (set to 9 in-lb)
- T-20 TORX driver (set to 21 in-lb)
- 5/16 inch open-end torque wrench (set to 10 in-lb)
- ESD grounding wrist strap

Removal Procedure

Refer to Figure 7-13 for this procedure.

1. Disconnect the power cord.
2. Remove the outer and inner covers. Refer to "Removing the Covers" on page 7-6.
3. Remove the A17 QABC board. Refer to "Removing and Replacing the A17 QABC Board" on page 7-28.
4. Remove the A18 MASSQuad from the A17 QABC board:
   a. Disconnect cables W63, W74, W75, W77, W78, and W79 from the A18 MASSQuad.
   b. Remove the three mounting screws (item ①) and remove the A18 MASSQuad from the A17 QABC board.

Replacement Procedure

1. Reverse the order of the removal procedure. Before installing the new A18 MASSQuad, remove the two 50-ohm loads from the old A18 MASSQuad and install them on the new A18 MASSQuad.

   Use the tools specified for all cable connections and mounting screws.
2. Perform the post-repair adjustments, verifications, and performance tests that pertain to this removal procedure. Refer to Table 7-2 on page 7-56.

Figure 7-13 A18 MASSQuad Removal

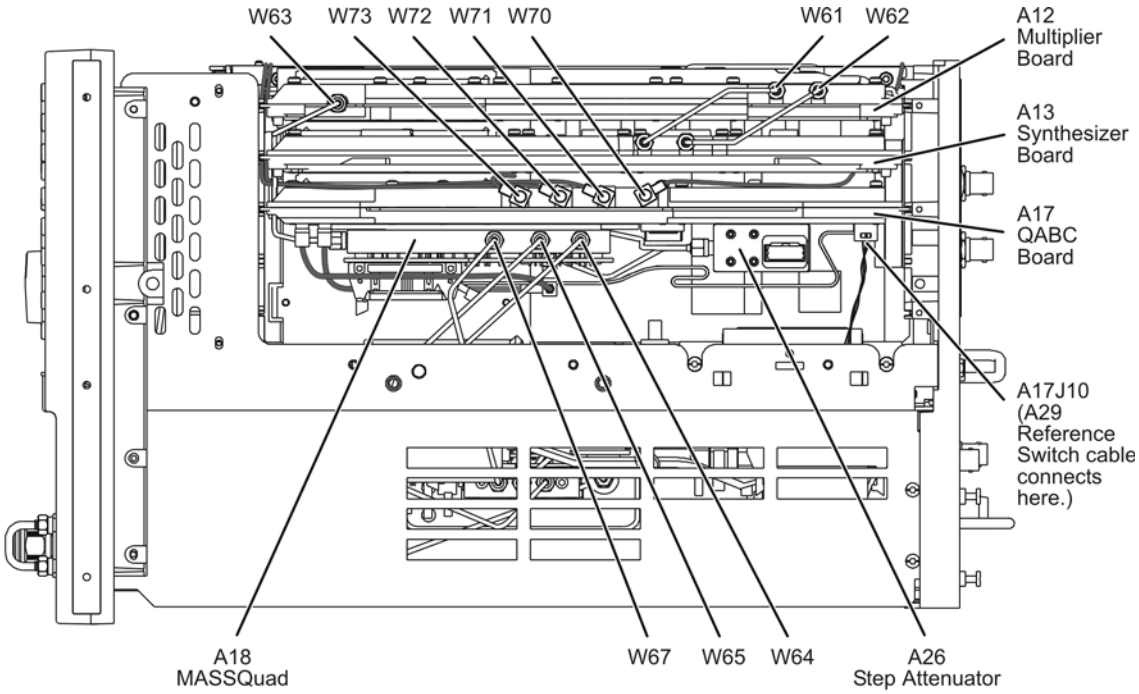

A17 QABC Board

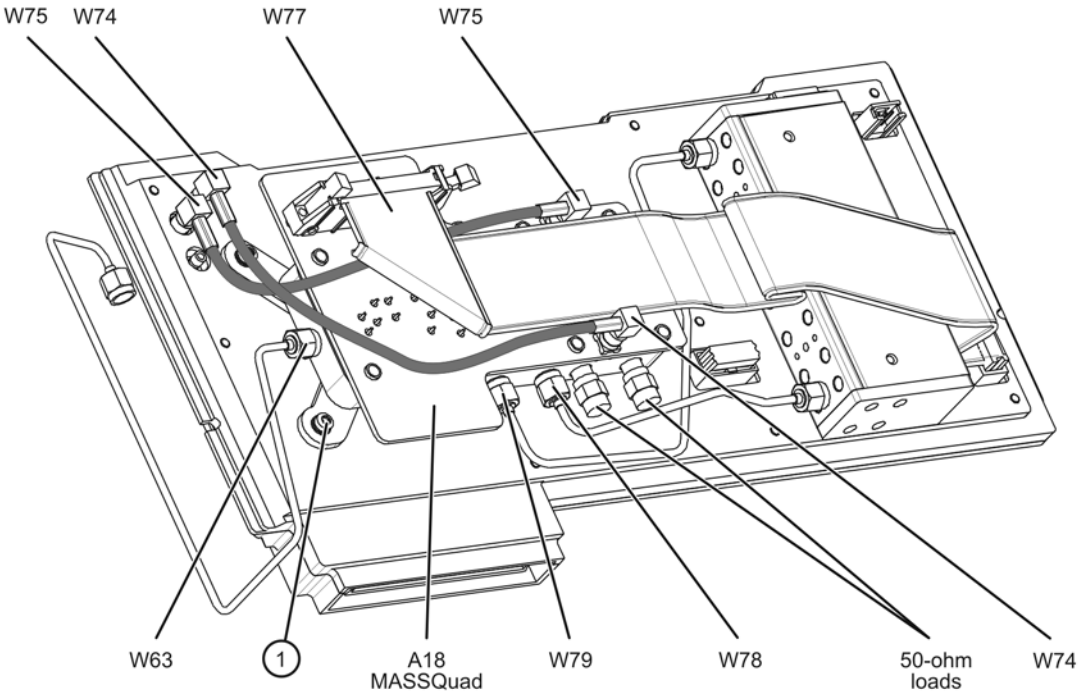

n5230_013_722

Removing and Replacing the A19 MASS 26.5 (MASSQuad) and MASSQuad Mounting Block

Tools Required

- T-10 TORX driver (set to 9 in-lb)
- T-20 TORX driver (set to 21 in-lb)
- 5/16 inch open-end torque wrench (set to 10 in-lb)
- ESD grounding wrist strap

Removal Procedure

Refer to Figure 7-14 for this procedure.

1. Disconnect the power cord.
2. Remove the outer cover. Refer to "Removing the Covers" on page 7-6. Position the analyzer bottom side up.
3. With a 5/16 inch wrench, disconnect the semirigid cables (item ①) from the A19 MASSQuad.
4. Disconnect the flexible cables (item ②), and the ribbon cable (item ③) from the A19 MASSQuad.
5. With a T-10 TORX driver, remove the mounting screws (item ④) from the A19 MASSQuad.

CAUTION Be careful not to damage the center pins of the semirigid cables. Some flexing of the cables is necessary to remove the assembly. Do not over bend the semirigid cables.

6. Remove the A19 MASSQuad from the analyzer. Observe the **CAUTION** above.
7. The MASSQuad mounting block can now be removed by removing the attachment screws (item ⑤). It is not necessary to remove the mounting block to replace the MASSQuad.

Replacement Procedure

1. Reverse the order of the removal procedure. If your analyzer contains the second source option (Options 146/246), there will be two 50-ohm loads attached to unused ports on the old A19 MASSQuad. Remove these loads and install them on the new A19 MASSQuad before installing it in the analyzer.

   Use the tools specified for all cable connections and mounting screws.
2. Perform the post-repair adjustments, verifications, and performance tests that pertain to this removal procedure. Refer to Table 7-2 on page 7-56.

Figure 7-14 A19 MASSQuad Removal

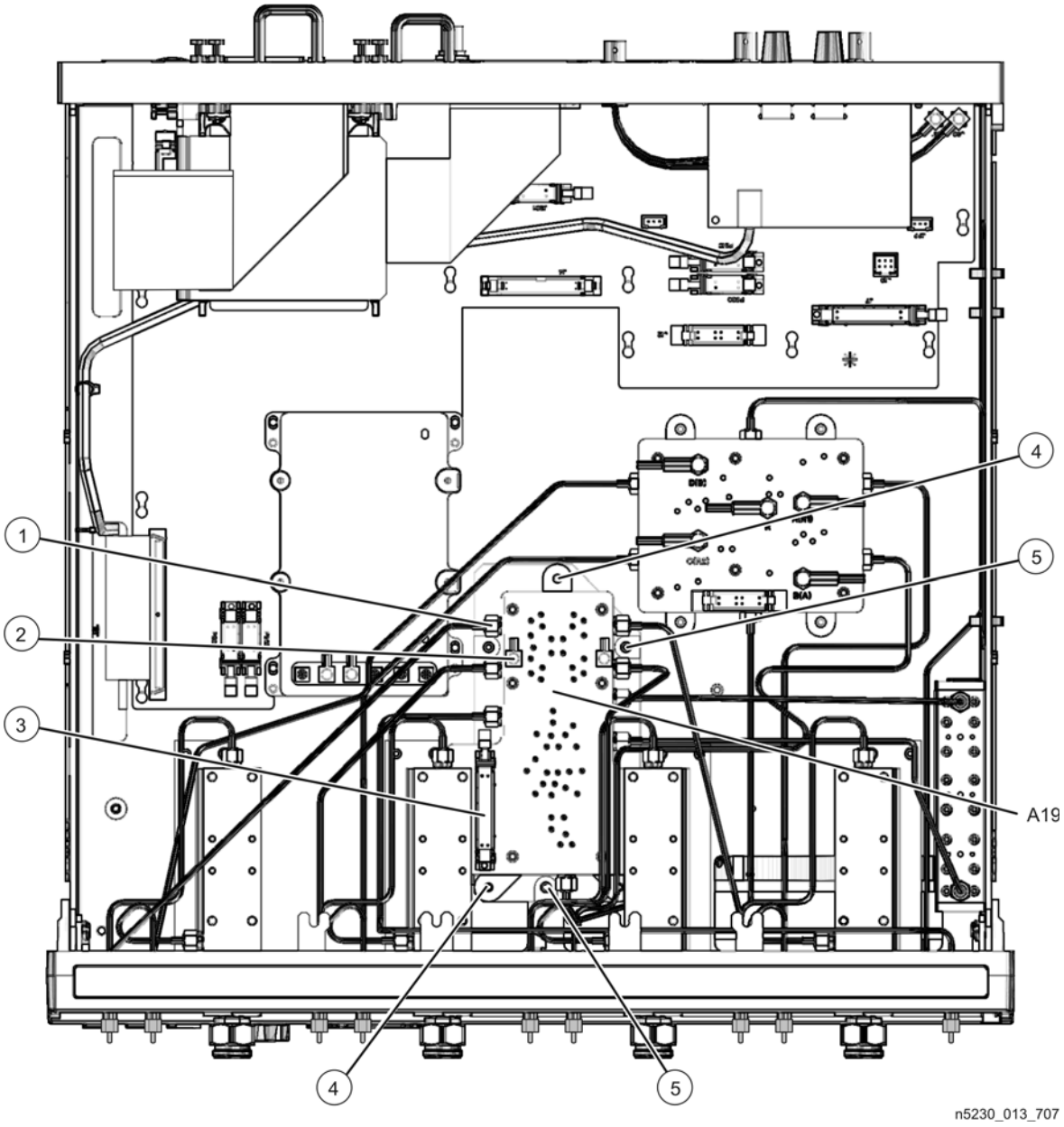

Removing and Replacing the A20 Mixer Brick (QuintBrick)

Tools Required

- T-10 TORX driver (set to 9 in-lb)
- T-20 TORX driver (set to 21 in-lb)
- 5/16 inch open-end torque wrench (set to 10 in-lb)
- ESD grounding wrist strap

Removal Procedure

Refer to Figure 7-15 for this procedure.

1. Disconnect the power cord.
2. Remove the outer cover. Refer to "Removing the Covers" on page 7-6. Position the analyzer bottom side up.
3. With a 5/16 inch wrench, disconnect the semirigid cables (item ①) from the A20 QuintBrick.
4. Disconnect the flexible cables (item ②) and the ribbon cable (item ③) from the A20 QuintBrick.
5. With a T-10 TORX driver, remove the mounting screws (item ④) from the A20 QuintBrick.

CAUTION Be careful not to damage the center pins of the semirigid cables. Some flexing of the cables is necessary to remove the assembly. Do not over bend them.

6. Remove the A20 QuintBrick from the analyzer. Observe the **CAUTION** above.

Replacement Procedure

1. Reverse the order of the removal procedure.

   Use the tools specified for all cable connections and mounting screws.
2. Perform the post-repair adjustments, verifications, and performance tests that pertain to this removal procedure. Refer to Table 7-2 on page 7-56.

Figure 7-15 A20 QuintBrick Removal

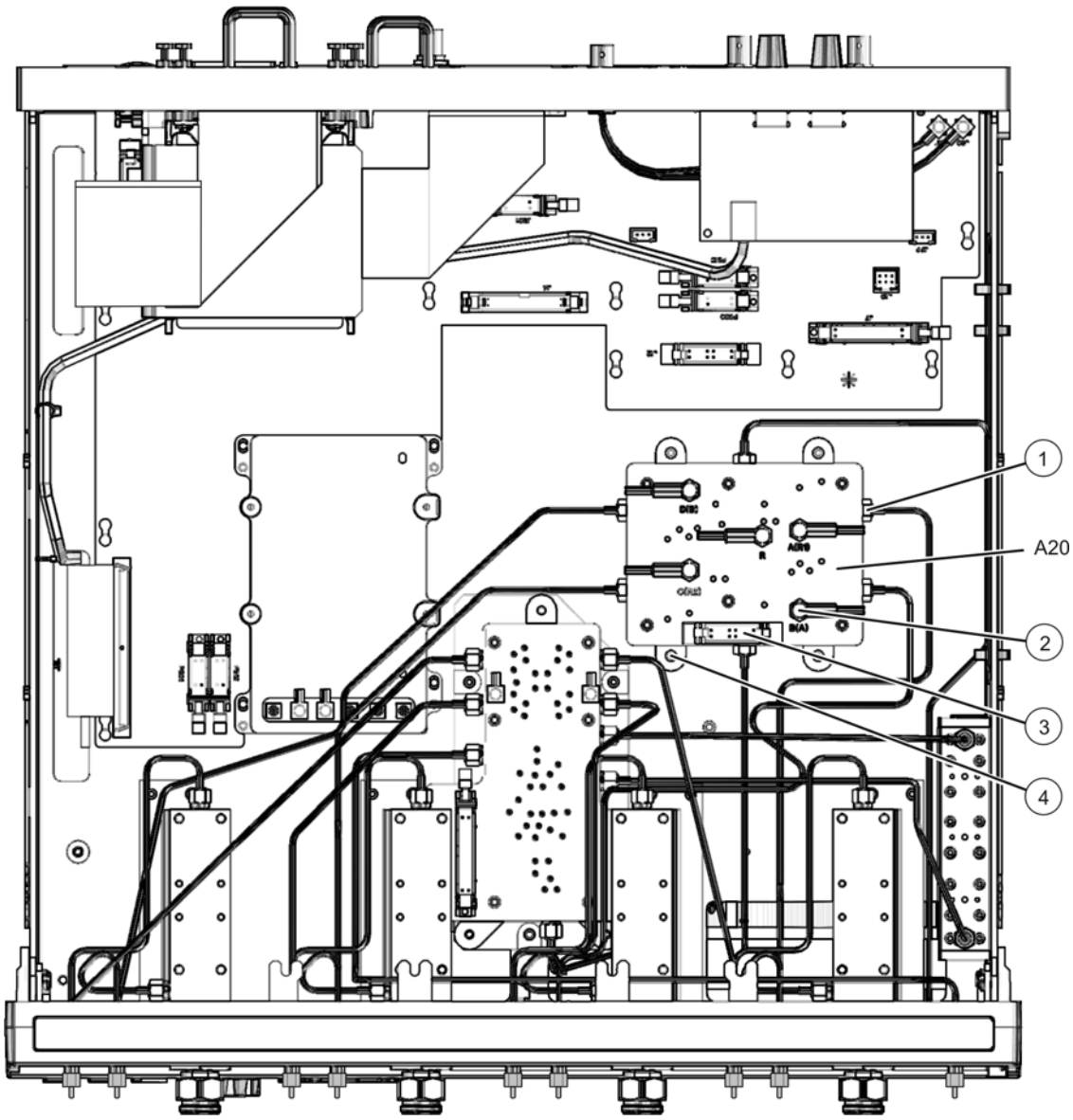

Removing and Replacing the A21, A22, A23, and A24 Test Port Couplers and Coupler Mounting Blocks

Tools Required

- T-10 TORX driver (set to 9 in-lb)
- T-15 TORX driver (set to 14 in-lb)
- T-20 TORX driver (set to 21 in-lb)
- 5/16 inch open-end torque wrench (set to 10 in-lb)
- 1 inch open-end torque wrench (set to 72 in-lb)
- ESD grounding wrist strap

Removal Procedure

Refer to Figure 7-16 for this procedure.

1. Disconnect the power cord.
2. Remove the outer cover. Refer to "Removing the Covers" on page 7-6. Position the analyzer bottom side up.
3. Identify the test port coupler to be removed.
4. With a 5/16 inch wrench, disconnect the semirigid cables (item ①) from the test port coupler.
5. With a T-15 TORX driver, remove the mounting screws (item ②) from the test port coupler.
6. With a 1 inch wrench, remove the test port coupler dress nut (item ③) from the front panel. Be careful not to scratch the front panel.

CAUTION Be careful not to damage the center pins of the semirigid cables. Some flexing of the cables is necessary to remove the assembly. Do not over bend them.

7. Remove the test port coupler from the analyzer. Observe the **CAUTION** above.
8. The test port coupler mounting block can now be removed by removing the attachment screws (item ④). It is not necessary to remove the mounting block to replace the coupler.

Replacement Procedure

1. Reverse the order of the removal procedure.

   Use the tools specified for all cable connections and mounting screws.
2. Perform the post-repair adjustments, verifications, and performance tests that pertain to this removal procedure. Refer to Table 7-2 on page 7-56.

Figure 7-16 A21, A22, A23, and A24 Test Port Couplers Removal

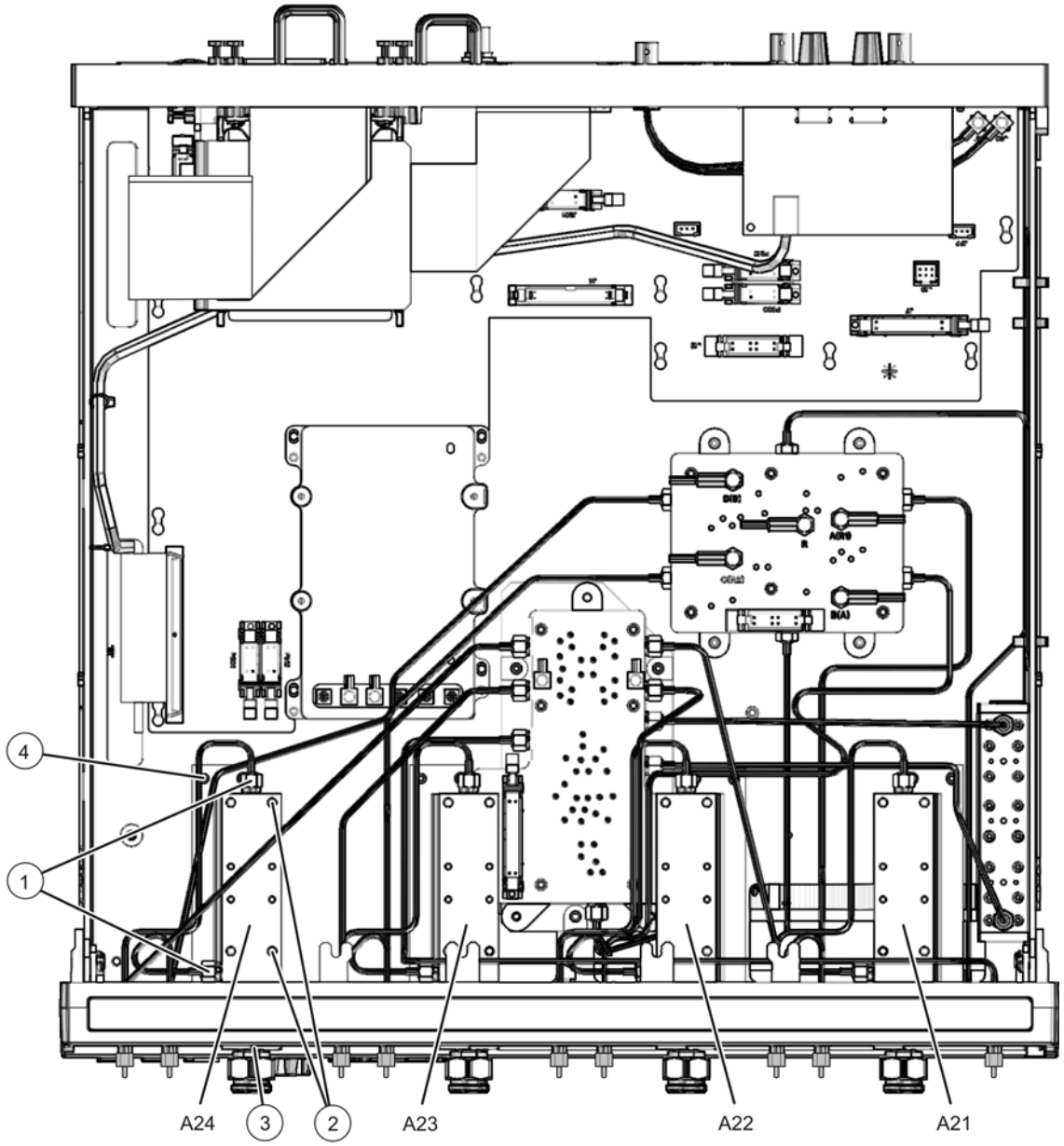

n5230_013_709

Removing and Replacing the A25 60-dB Source Step Attenuator

Tools Required

- T-10 TORX driver (set to 9 in-lb)
- T-20 TORX driver (set to 21 in-lb)
- 5/16-inch open-end torque wrench (set to 10 in-lb)
- ESD grounding wrist strap

Removal Procedure

Refer to Figure 7-17 for this procedure.

1. Disconnect the power cord.
2. Remove the outer cover. Refer to "Removing the Covers" on page 7-6. Position the analyzer bottom side up.
3. Disconnect the ribbon cable (item ①) from the A25 step attenuator.
4. Using a 5/16-inch wrench, disconnect the semi-rigid cables (item ②) from the A25 step attenuator.
5. With a T-10 TORX driver, loosen the mounting screws (item ③) in the analyzer side frame. It is not necessary to completely remove the mounting screws.

CAUTION Be careful not to damage the center pins of the semirigid cables. Some flexing of the cables is necessary to remove the assembly. Do not over bend them.

6. Slide the attenuator upward to release the mounting screws and remove the A25 step attenuator from the analyzer. Observe the **CAUTION** above.

Replacement Procedure

1. Remove the mounting screws from the old attenuator and insert them loosely into the new attenuator.
2. Reverse the order of the removal procedure.

   Use the tools specified for all cable connections and mounting screws.
3. Perform the post-repair adjustments, verifications, and performance tests that pertain to this removal procedure. Refer to Table 7-2 on page 7-56.

Figure 7-17 A25 60-dB Source Step Attenuator Removal

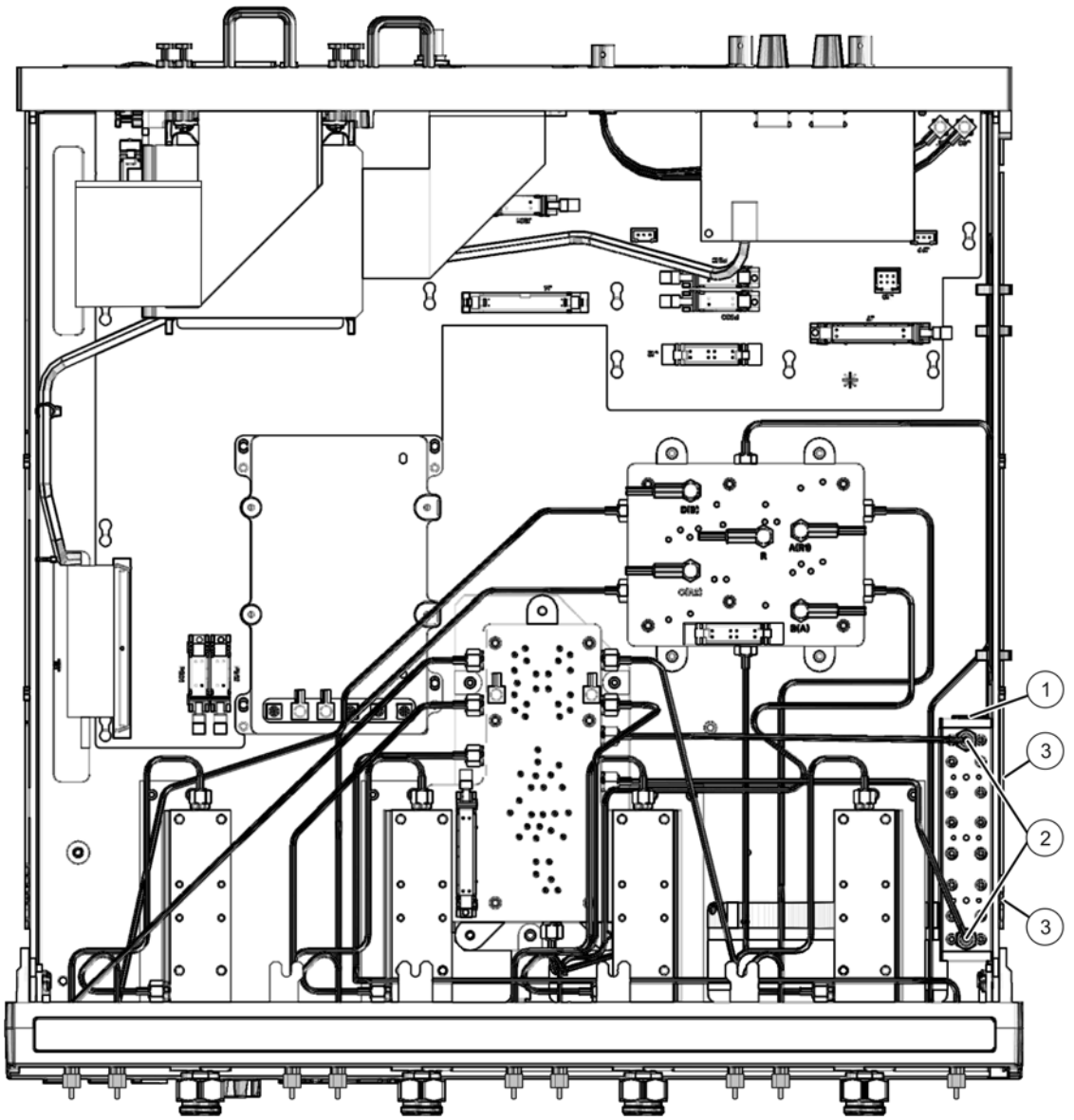

n5230_013_710

Removing and Replacing the A26 60-dB Source Step Attenuator

Tools Required

- T-10 TORX driver (set to 9 in-lb)
- T-20 TORX driver (set to 21 in-lb)
- 5/16 inch open-end torque wrench (set to 10 in-lb)
- ESD grounding wrist strap

Removal Procedure

Refer to Figure 7-18 for this procedure.

1. Disconnect the power cord.
2. Remove the outer and inner covers. Refer to "Removing the Covers" on page 7-6.
3. Remove the A17 QABC board. Refer to "Removing and Replacing the A17 QABC Board" on page 7-28.
4. Remove the A26 step attenuator from the A17 QABC board:
   a. Disconnect cables W76, W78, and W79 from the A26 step attenuator.
   b. Remove the two mounting screws, located on the other side of the A17 QABC board, and remove the A26 step attenuator from the A17 QABC board.

Replacement Procedure

1. Reverse the order of the removal procedure.

   Use the tools specified for all cable connections and mounting screws.
2. Perform the post-repair adjustments, verifications, and performance tests that pertain to this removal procedure. Refer to Table 7-2 on page 7-56.

Figure 7-18 A26 60-dB Source Step Attenuator Removal

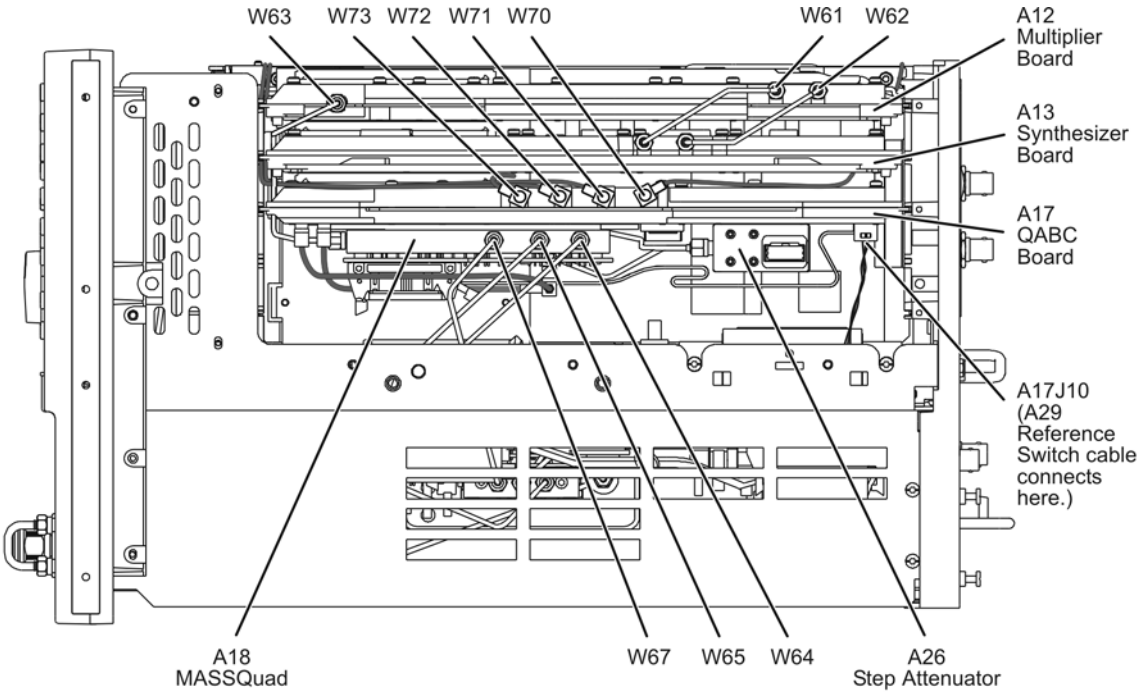

A17 QABC Board

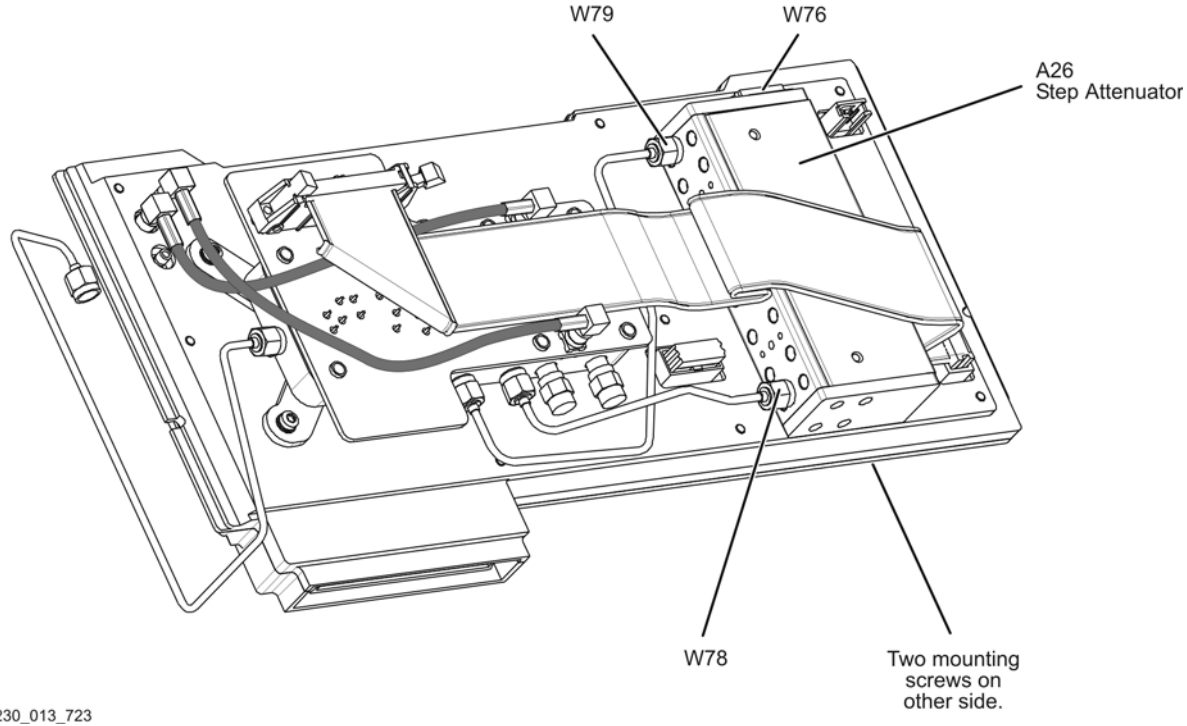

n5230_013_723

Removing and Replacing the A29 Reference Switch, Limiter, and DC Block

Tools Required

- T-10 TORX driver (set to 9 in-lb)
- T-20 TORX driver (set to 21 in-lb)
- 1/4 inch open-end wrench
- 5/16 inch open-end wrench
- 5/16 inch open-end torque wrench (set to 10 in-lb)
- ESD grounding wrist strap

Removal Procedure

Refer to Figure 7-19 for this procedure.

1. Disconnect the power cord.
2. Remove the outer and inner covers. Refer to "Removing the Covers" on page 7-6.
3. Remove the A29 reference switch (and bracket if necessary):
   a. Disconnect the A29 reference switch cable from the A17 QABC board at A17J10. This connector can be accessed from the right side of the analyzer. Refer to Figure 7-12 on page 7-29 for location of this cable connector.
   b. Disconnect cables W66, W67, and W68.
   c. Remove two screws (item ①) and remove the A29 reference switch.
   d. To remove the A29 reference switch bracket, remove three screws (item ②).
4. Remove the DC block and limiter:
   a. Disconnect cable W69 from the DC block.
   a. While holding the hex nut on cable W68 with a 1/4-in wrench, use a 5/16-in wrench to disconnect this cable from the limiter.
   b. Cut the cable tie used to secure the limiter and remove the DC block and limiter from the analyzer.
   c. Using a 5/16-in wrench to hold the hex nut on the limiter, use another 5/16-in wrench to loosen the DC block connector and remove the DC block from the limiter.

Replacement Procedure

1. Reverse the order of the removal procedure using the tools specified. Be sure to install a new cable tie to secure the limiter.
2. Perform the post-repair adjustments, verifications, and performance tests that pertain to this removal procedure. Refer to Table 7-2 on page 7-56.

Figure 7-19 A29 Reference Switch, Limiter, and DC Block Removal

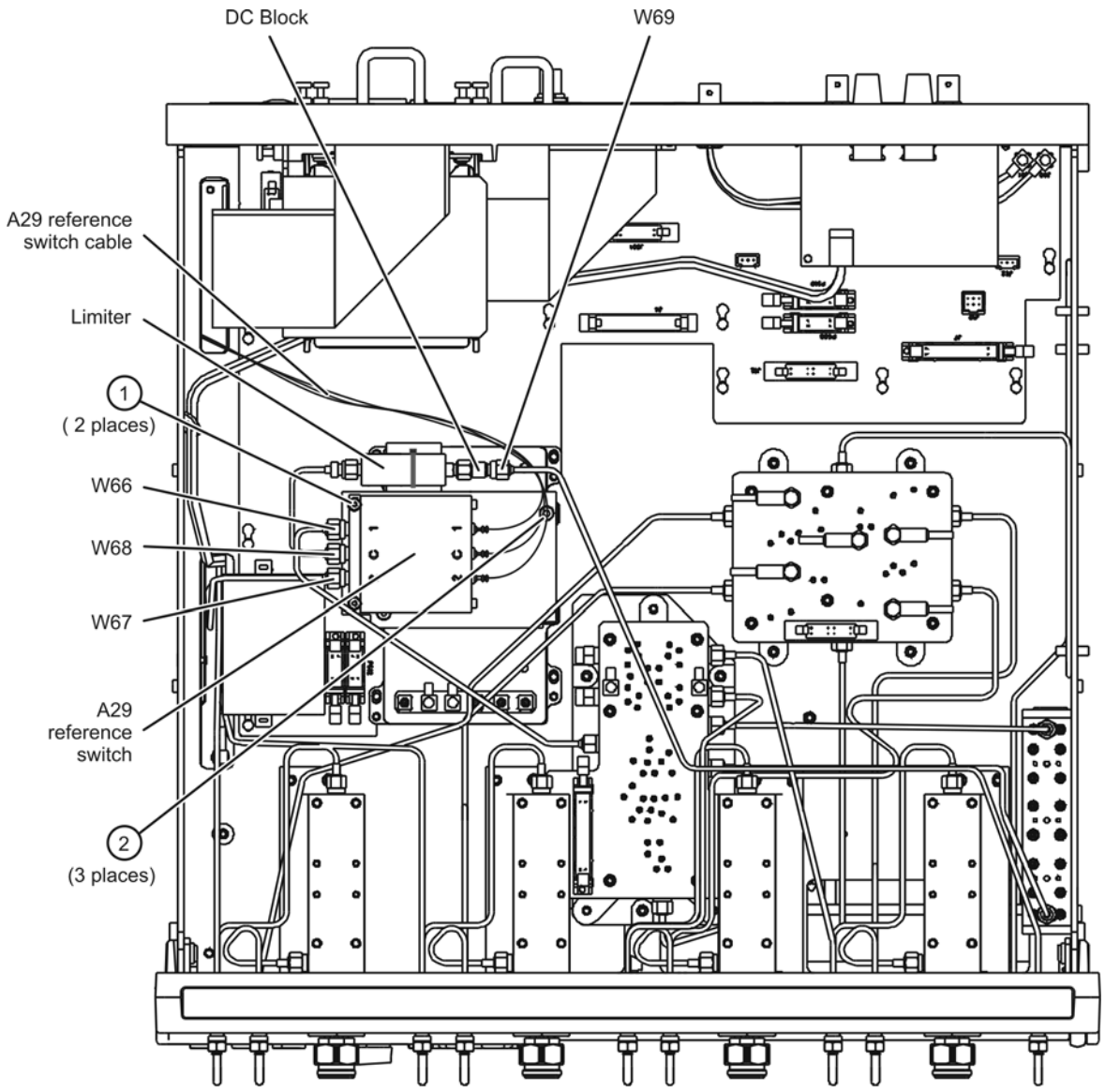

n5230_013_720

Removing and Replacing the A40 Floppy Disk Drive

Tools Required

- T-10 TORX driver (set to 9 in-lb)
- T-20 TORX driver (set to 21 in-lb)
- 5/16 inch open-end torque wrench (set to 10 in-lb)
- ESD grounding wrist strap

Removal Procedure

Refer to Figure 7-20 and Figure 7-21 for this procedure.

1. Disconnect the power cord.
2. Remove the outer and inner covers. Refer to "Removing the Covers" on page 7-6.
3. Remove the front panel assembly. Refer to "Removing and Replacing the Front Panel Assembly" on page 7-8.
4. Disconnect the ribbon cable (item ①) from the A14 system motherboard.
5. Lift the tab at the rear of the A40 floppy disk drive enclosure and remove the enclosure rear cover (item ②).
6. Slide the A40 floppy disk drive out of the front of the enclosure. The A40 floppy disk drive fits snugly. You may have to push the drive from the back to remove it from the analyzer.

Replacement Procedure

1. Reverse the order of the removal procedure using the existing ribbon cable (item ①).

   Use the tools specified for all cable connections and mounting screws.
2. Perform the post-repair adjustments, verifications, and performance tests that pertain to this removal procedure. Refer to Table 7-2 on page 7-56.

Figure 7-20 A40 Floppy Disk Drive Removal

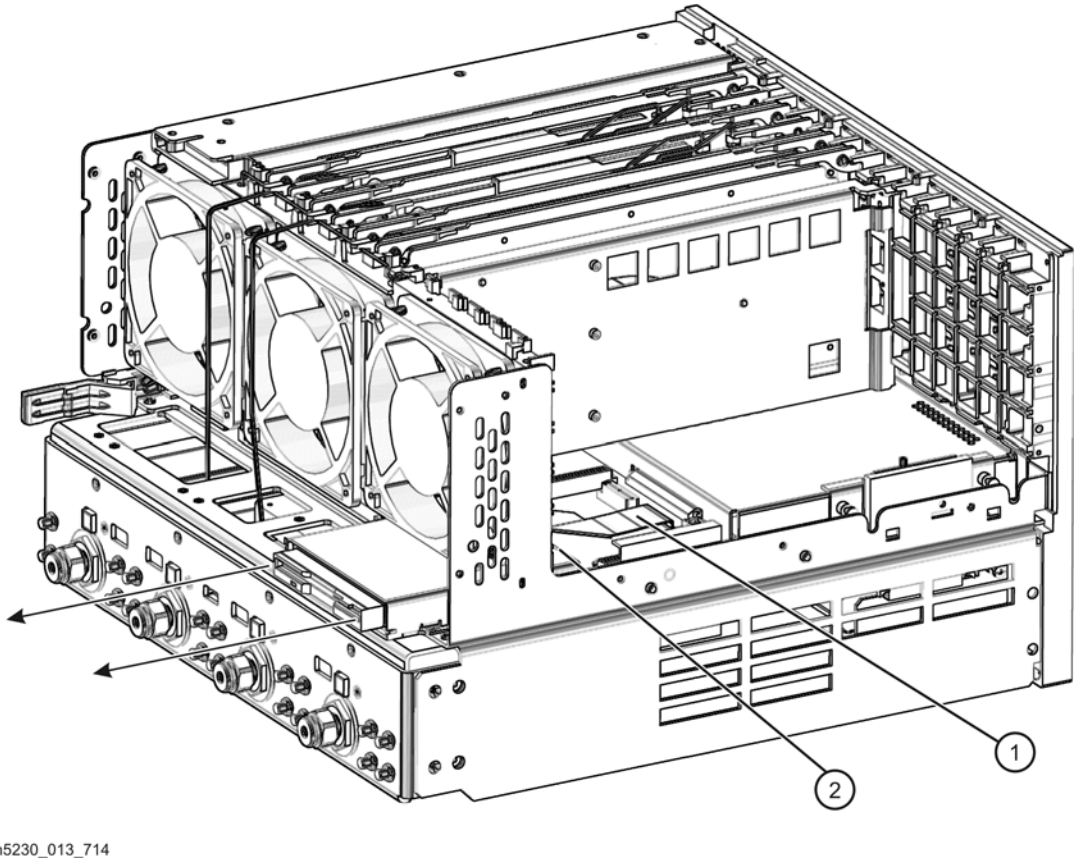

Figure 7-21 A40 Floppy Disk Drive (Exploded View)

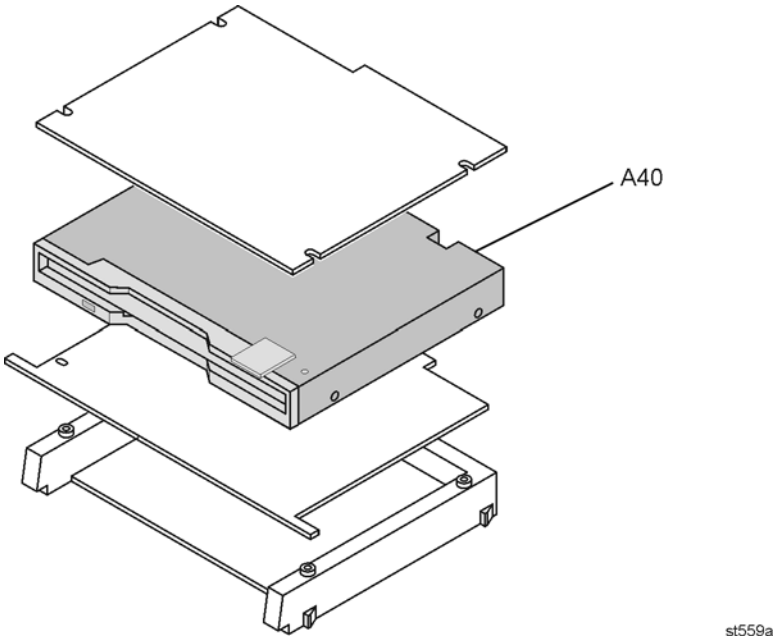

Removing and Replacing the A41 Hard Disk Drive

Certain unique files exist on the hard disk drive that are necessary for proper operation of your analyzer. These files must be copied to another location to allow them to be installed onto the new hard disk drive after it has been installed.

If you are replacing the hard disk, not just removing the hard disk drive assembly (HDDA) to allow access to other assemblies, the following procedure must be performed first.

If you are not replacing the actual hard disk, proceed to "Tools Required" on page 7-47.

Copy Unique Files from the Hard Disk

The files to be copied include:

- license file (gen.lic)
- mixer calibration files (mxcalfile_)
- user calibration kit file (user_calkitfile)
- any user data files or program files that need to be preserved

The network analyzer must be powered up and operating for this procedure.

1. Insert a writable floppy disk into the floppy disk drive.
2. Open two copies of **Windows Explorer**:
   a. Click on **START**. (It may be necessary to exit the **Network Analyzer** application.)
   b. Point to **Programs**, **Accessories**, and then click on **Windows Explorer**.
   c. Adjust the horizontal width of the **Windows Explorer** window to approximately one-half the width of the display and position it to either the left or right side of the display.
   d. Repeat this procedure to create another copy of the **Windows Explorer** window and position it to the opposite side of the display so that the two copies are displayed side-by-side.
3. Set one copy of **Windows Explorer** to the **A:** drive and the other to the **C**: drive:
   a. In one copy of **Windows Explorer**, double-click on **My Computer**, and then double-click on **3 1/2 Floppy (A:)**. A listing of the files on the floppy disk will appear in the right-hand side of the window.
   b. In the other copy of **Windows Explorer**, double-click on **My Computer**, and then double-click on **Hard Disk (C:)**.
   c. Navigate to `C:\Program Files\Agilent\Network Analyzer` by double-clicking on each of the names in this path name, in turn. A listing of the files in this directory on the hard disk will appear in the right-hand side of the window.

4. Copy each of the following files from the hard disk drive to the floppy disk drive:
   a. Files to copy:
      - `gen.lic`
      - `user_calkitfile`
      - All files prefixed with `mxcalfile_`.
      - Any personal user files that you wish to preserve.
   b. Click and drag each of the files on the C: drive from the `C:\Program Files\Agilent\Network Analyzer` directory by clicking and holding on the file name in the directory and, while holding the mouse button down, drag the file name to the A: drive. If you need help with this "dragging" process, refer to Windows Help. (Click **START**, **HELP**. Click on the **Index** tab and type **dragging** in the dialog box.)
5. After all files have been copied, remove the floppy disk from the analyzer's disk drive and exit both copies of **Windows Explorer**.

Tools Required

- T-10 TORX driver (set to 4 in-lb; for hard disk drive replacement)
- T-10 TORX driver (set to 7 in-lb; for hard disk drive replacement)
- T-10 TORX driver (set to 9 in-lb; for all other T-10 applications)
- T-20 TORX driver (set to 21 in-lb)
- ESD grounding wrist strap

Overview of Procedures

There are two procedures related to removing and replacing the hard disk drive assembly (HDDA):

Removing the HDDA

Disconnect and remove the HDDA from the analyzer so that the following assemblies may be serviced.

- A14 system motherboard
- A16 test set motherboard
- A41 hard disk drive

Disassembling the HDDA

This procedure outlines how to disassemble the HDDA, once it has been removed from the analyzer, to replace the A41 hard disk drive.

Removal Procedure

1. Disconnect the power cord.

Removing the HDDA

Refer to Figure 7-22 for this procedure.

1. With a T-10 TORX driver, loosen the four HDDA mounting screws (item ①) on the rear panel.
2. Remove the HDDA from the analyzer by pulling on the finger grip (item ②). The HDDA interconnects with a connector inside the analyzer rear panel so moderate force may be necessary to disengage this connector.

Figure 7-22 Hard Disk Drive Assembly Removal

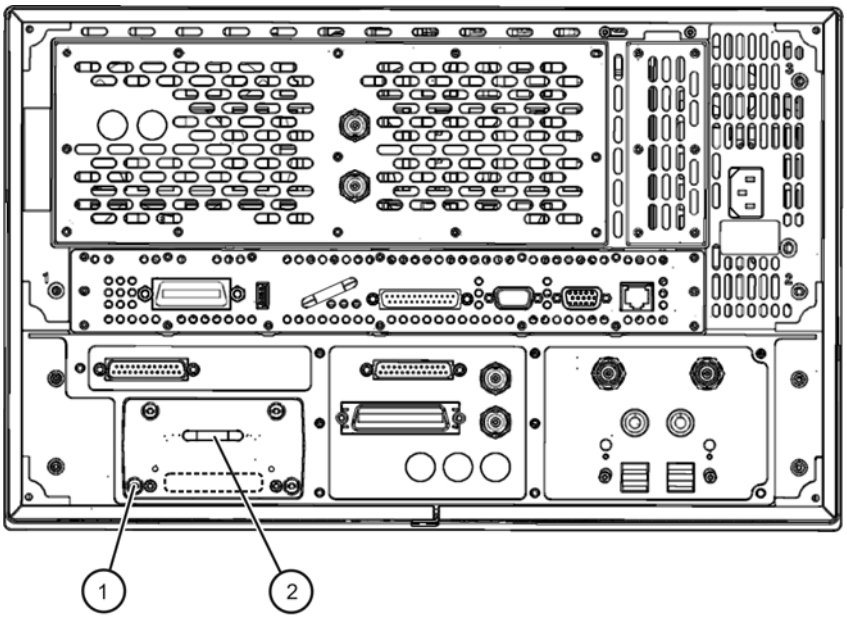

Disassembling the HDDA

Refer to Figure 7-23.

1. Remove the hard disk drive assembly from the analyzer. Refer to "Removing the HDDA" on page 7-48.
2. With a T-10 TORX driver, remove the four screws (item ①), and the eight bushings (item ②), that mount the hard disk (item ④), to the bracket.
3. Disconnect the hard disk (item ④) from the interface board (item ③).

Figure 7-23 Hard Disk Drive Assembly (Exploded View)

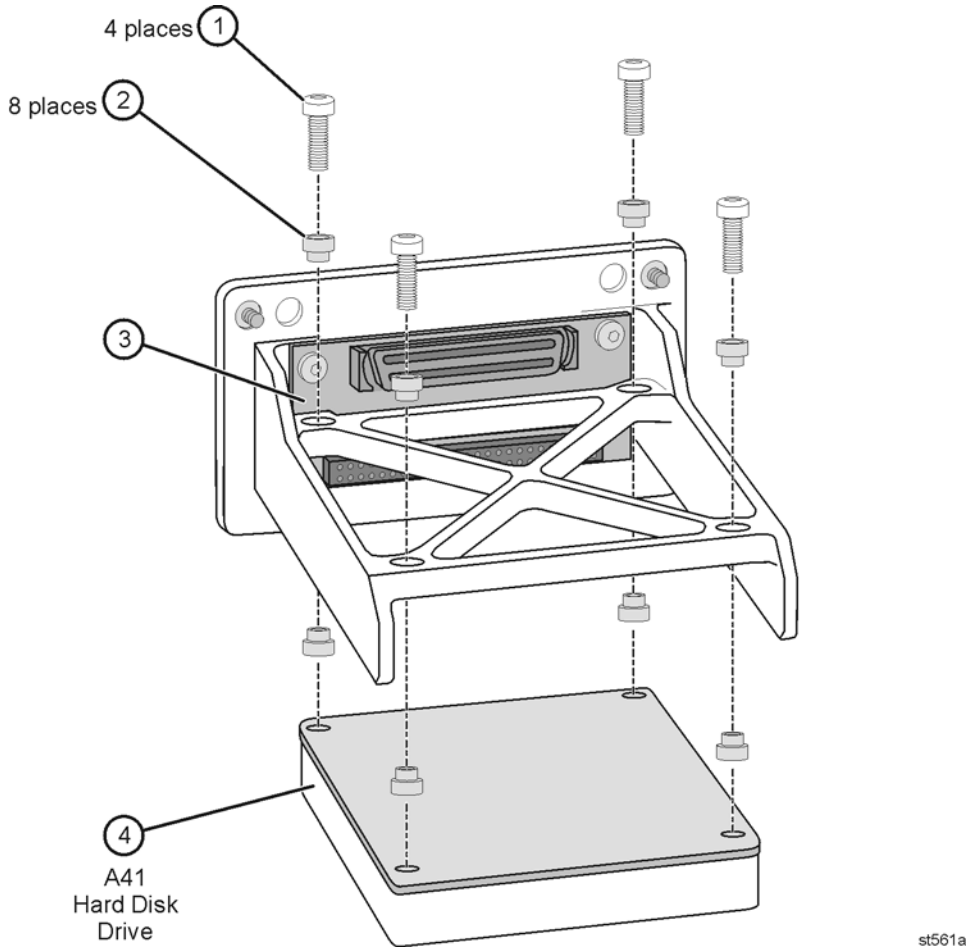

Replacement Procedure

Installing the New A41 Hard Disk Drive

Refer to Figure 7-23 on page 7-49.

1. With the disk drive bracket right-side up (it is shown upside down in Figure 7-23), insert four bushings (item ②) into the four holes in the bracket.
2. Connect the new hard disk drive (item ④) to the interface board (item ③) by pushing it firmly into the connector on the interface board. **Take special care to align the connector pins. Applying power to a misaligned connection can permanently damage the hard disk drive.**
3. While holding the disk drive in place, turn the bracket over and insert the other four bushings (item ②), into the other side of the same four holes specified in step 1.
4. Install the four screws (item ①), finger tight, through the eight bushings (item ②), to attach the hard disk drive to the bracket.

   With a T-10 TORX driver, torque the four screws, in a Z-pattern, to 4 in-lb, and then torque them again, in the same pattern, to 7 in-lb.

Reinstalling the HDDA

Refer to Figure 7-22 on page 7-48.

1. Slide the hard disk drive assembly into the slot in the rear panel and push it firmly into place to engage the connector.
2. With a T-10 TORX driver, tighten the four HDDA mounting screws (item ①).

Set Up the Agilent Administrator Password

If the hard disk has been replaced, it is necessary to set up the Agilent administrator password for the analyzer. This requires obtaining a password from Agilent:

Obtaining a Password

- If this procedure is being performed by Agilent personnel, go to the following Internet site and follow the instructions under “Agilent Administrator Password”.

  http://mktwww.soco.agilent.com/field/service/network/pna/support.htm

- If this procedure is being performed by non-Agilent personnel, contact Agilent for a password before beginning this procedure. Refer to “Contacting Agilent” on page 2-11.

Entering Your Agilent Administrator Password

The network analyzer must be powered up and operating for this procedure.

1. On the **Windows Desktop**, right-click on **My Computer**, and then click **Manage**.
2. In the **Computer Management** window, navigate to **System Tools**, **Local Users and Groups**, **Users**.
3. Right-click on **Agilent**, and then click on **Set Password**.
   a. Type the password obtained from Agilent as the **Password**. Refer to “Obtaining a Password” on page 7-51 for information if you have not yet obtained this password.
   b. Type the password again in the **Confirm password** block.
   c. Click **OK**.
4. Right-click on **Agilent**, and then click on **Properties**.
   a. Unselect **User must change password at next logon** (if not already unselected).
   b. Unselect **User cannot change password** (if not already unselected).
   c. Select **Password never expires** (if not already selected).
   d. Click **OK**.
5. Close the **Computer Management** window.

Install Backup Files onto the New Hard Disk Drive

The files that were saved previously saved onto a floppy disk must now be installed onto the new hard disk drive. The network analyzer must be powered up and operating.

An abbreviated procedure is provided in *italic* typeface. If you need more detailed instructions, they are provided in each step following the italicized instruction.

1. *Insert the floppy disk containing the backup files into the floppy disk drive.*
2. *Open two copies of* ***Windows Explorer****:*

   Detailed instructions:

   a. Click on **START**. (It may be necessary to exit the **Network Analyzer** application.)

   b. Point to **Programs**, **Accessories**, and then click on **Windows Explorer**.

   c. Adjust the horizontal width of the **Windows Explorer** window to approximately one-half the width of the display and position it to either side of the display.

   d. Repeat this procedure to create another copy of the **Windows Explorer** window and position it to the opposite side of the display so that the two copies are displayed side-by-side.
3. *Set one copy of* ***Windows Explorer*** *to the* ***A:*** *drive and the other to the* ***C****: drive:*

   Detailed instructions:

   a. In one copy of **Windows Explorer**, double-click on **My Computer**, and then double-click on **3 1/2 Floppy (A:)**. A listing of the files on the floppy disk will appear in the right-hand side of the window.

   b. In the other copy of **Windows Explorer**, double-click on **My Computer**, and then double-click on **Hard Disk (C:)**.

   c. Navigate to `C:\Program Files\Agilent\Network Analyzer` by double-clicking on each of the names in this path name, in turn. A listing of the files in this directory on the hard disk will appear in the right-hand side of the window.
4. *Copy each of the backup files from the floppy disk to the hard disk drive:*

   Detailed instructions:

   a. Click and drag each of the files from the **A:** drive to the `C:\Program Files\Agilent\Network Analyzer` directory by clicking and holding on the file name in the **A:** directory and, while holding the mouse button down, drag the file name to the `Network Analyzer` directory on the **C:** drive. If you need help with this "dragging" process, refer to Windows Help.
5. *Repeat steps 3 and 4 for the* ***A:*** *and* ***D:*** *drives. After all files have been copied, remove the floppy disk from the analyzer's disk drive and exit both copies of* ***Windows Explorer****.*

Post-Repair Procedures

1. Adhere the new Certificate of Authenticity (license) label to the outer cover in the location specified in Figure 7-1 on page 7-7.
2. Perform the post-repair adjustments, verifications, and performance tests that pertain to this removal procedure. Refer to Table 7-2 on page 7-56.

Removing and Replacing the Midweb and the B1 Fan

Tools Required

- T-10 TORX driver (set to 9 in-lb)
- T-20 TORX driver (set to 21 in-lb)
- Pozidriv screw driver
- 5/16 inch open-end torque wrench (set to 10 in-lb)
- ESD grounding wrist strap

Removal Procedure

1. Disconnect the power cord.
2. Remove the front panel assembly. Refer to "Removing and Replacing the Front Panel Assembly" on page 7-8.
3. Remove the outer and inner covers. Refer to "Removing the Covers" on page 7-6.
4. Remove the A22 test port coupler. This is necessary to gain access to one of the midweb mounting screws. Refer to "Removing and Replacing the A21, A22, A23, and A24 Test Port Couplers and Coupler Mounting Blocks" on page 7-36.
5. Remove the A19 MASSQuad and the MASS mounting block. This is necessary to gain access to one of the midweb mounting screws. Refer to "Removing and Replacing the A19 MASS 26.5 (MASSQuad) and MASSQuad Mounting Block" on page 7-32.
6. Remove the A4 power supply assembly. Refer to "Removing and Replacing the A4 Power Supply Assembly" on page 7-14.
7. Remove the card cage boards (A5 through A10) and plenum bracket. Refer to "Removing and Replacing the A5 through A10 Boards" on page 7-16.
8. Remove the second source boards (A11, A12, A13, and A17). Refer to "Removing and Replacing the A12 Multiplier and the A13 Fractional-N Synthesizer Boards" on page 7-20.

NOTE This procedure has two parts: removing the midweb and removing the fan from the midweb. You must remove the midweb before removing the fan.

Removing the Midweb

Refer to Figure 7-24.

1. Disconnect the power cable (item ①) for each of the three fans from the A14 system motherboard.
2. With a T-10 TORX driver, remove the seven midweb mounting screws (item ②). Three of the mounting screws are located on the bottom of the chassis. The analyzer must be placed on its side to access these three screws.
3. Lift out the midweb being careful not to damage any adjacent components.

Figure 7-24 Midweb Removal

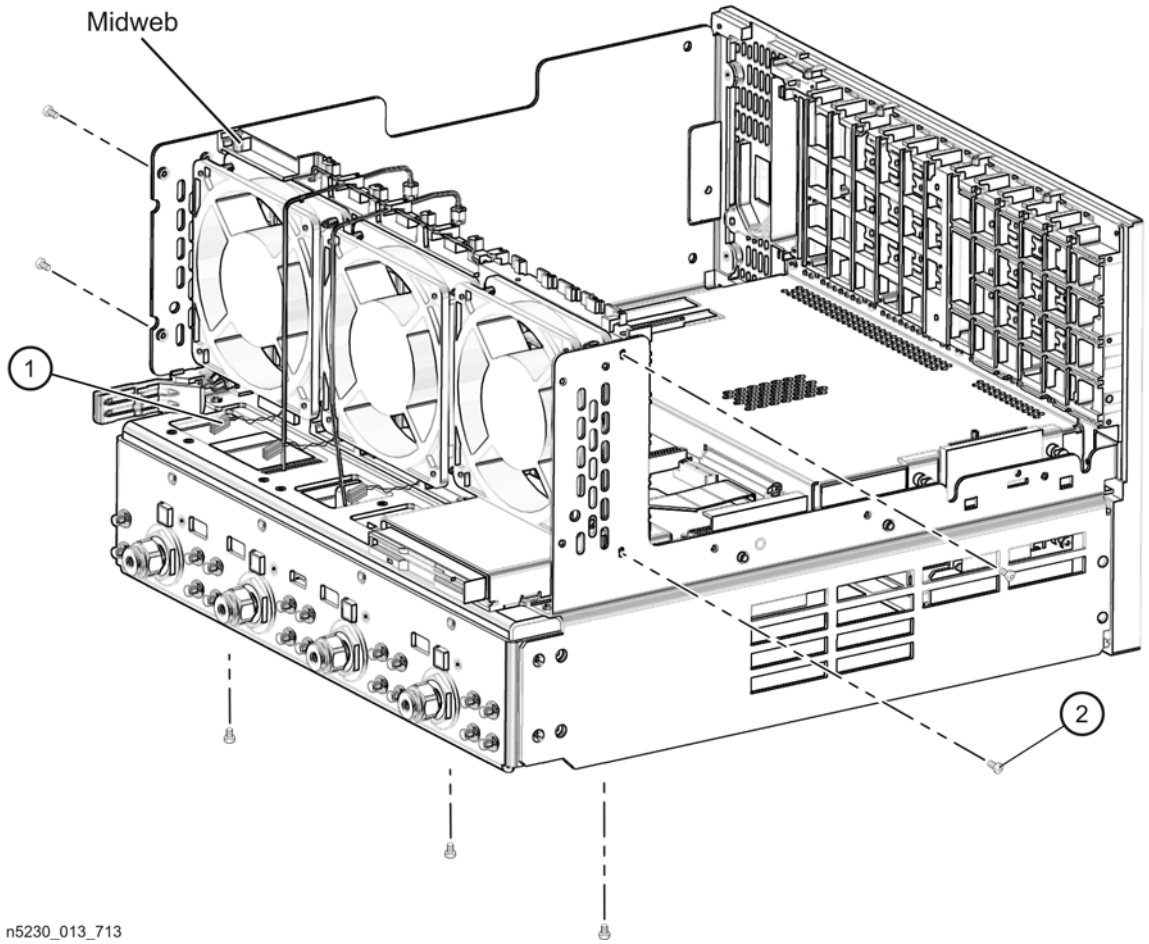

Removing the Fan

Refer to Figure 7-25.

1. To remove the fan, it is necessary to remove the four nylon rivets that attach it to the midweb. To do this, use the Pozidriv screwdriver on the nylon screw (item ①) and a small blade screwdriver to stabilize the rivet. Turn and push the rivet out of the rivet hole. Once the four rivets are out, remove the fan.

Figure 7-25 B1 Fan Removal

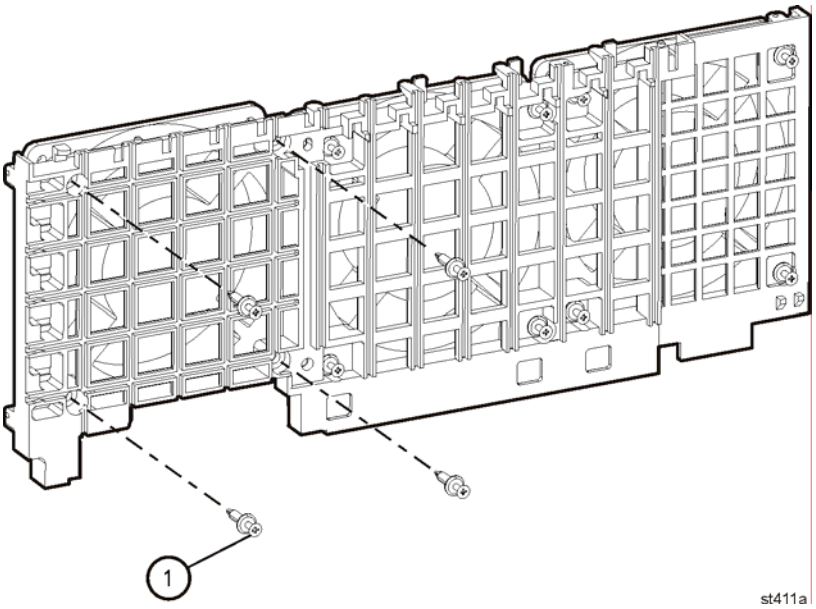

Replacement Procedure

1. Reverse the order of the removal procedure.

   Use the tools specified for all mounting screws.

2. Perform the post-repair adjustments, verifications, and performance tests that pertain to this removal procedure. Refer to Table 7-2 on page 7-56.

Post-Repair Procedures

After the replacement of an assembly, you must perform the service procedures in the order listed in Table 7-2.

Procedures referenced in this table are located in Chapter 3, "Tests and Adjustments," unless specified otherwise.

Table 7-2 Related Service Procedures

Replaced Assembly	Adjustments and Other Procedures	Verification, Performance, and Other Tests and Procedures
A1 keypad assembly	No adjustment needed	A1 Front Panel Keypad and RPG Test in Chapter 4
A2 display assembly	No adjustment needed	A2 Display Test in Chapter 4
A3 front panel interface board	No adjustment needed	A1 Front Panel Keypad and RPG Test and A2 Display Test in Chapter 4
A4 power supply assembly	No adjustment needed	None needed
A5 SPAM board	No adjustment needed	Noise Floor Test Trace Noise Test
A6 multiplier board	No adjustment needed	The Operator's Check
A7 fractional-N synthesizer board	No adjustment needed	The Operator's Check
A8 or A12[a] multiplier board	Source Calibration Adjustment Receiver Calibration Adjustment	Frequency Accuracy Test Source Power Accuracy Test Source Maximum Power Output Test Source Power Linearity Test The Operator's Check
A9 or A13[a] fractional-N synthesizer board	Source Calibration Adjustment Receiver Calibration Adjustment	Frequency Accuracy Test Source Power Accuracy Test Source Maximum Power Output Test Source Power Linearity Test The Operator's Check
A10 frequency reference board	10 MHz Frequency Reference Adjustment Restore option data (Refer to "Repairing and Recovering Option Data" in Appendix B.)	Frequency Accuracy Test
A11 vertical motherboard	No adjustment needed	The Operator's Check
A14 system motherboard	No adjustment needed	A1 Front Panel Keypad and RPG Test and A2 Display Test in Chapter 4 The Operator's Check
A15 CPU board	No adjustment needed	The Operator's Check

Table 7-2 Related Service Procedures (Continued)

Replaced Assembly	Adjustments and Other Procedures	Verification, Performance, and Other Tests and Procedures
A16 test set motherboard	Reinstall the serial number. (Refer to "Installing or Changing a Serial Number" in Appendix B.) Re-enable all hardware options. (Refer to "Enabling or Removing Options" in Appendix B.)	The Operator's Check
A17[a] QABC board	Source Calibration Adjustment Receiver Calibration Adjustment	Frequency Accuracy Test Source Maximum Power Output Test The Operator's Check
A19 or A18[a] MASS 26.5 (MASSQuad)	Source Calibration Adjustment Receiver Calibration Adjustment	Frequency Accuracy Test Source Power Accuracy Test Source Maximum Power Output Test Source Power Linearity Test The Operator's Check
A20 mixer brick (QuintBrick)	Receiver Calibration Adjustment	Receiver Compression Test Noise Floor Test Calibration Coefficients Test Dynamic Accuracy Test
A21, A22, A23 and A24 test port couplers	Source Calibration Adjustment Receiver Calibration Adjustment	Source Maximum Power Output Test Calibration Coefficients Test
A25 or A26[a] 60-dB source step attenuator	Source Calibration Adjustment Receiver Calibration Adjustment	Source Maximum Power Output Test Calibration Coefficients Test
A29 reference switch	No adjustment needed	The Operator's Check
A40 floppy disk drive	No adjustment needed	Read and write to the drive
A41 hard disk drive	Restore previously saved receiver calibration data[b] (or perform Receiver Calibration Adjustment)	Read and write to the drive
B1 fan	No adjustment needed	Check for fan operation
Limiter, DC block	No adjustment needed	The Operator's Check
USB hub	No adjustment needed	Check for proper operation

a. When testing this assembly, the tests are performed on Port 3 for the second source path.
b. If a backup copy of receiver calibration data from the faulty disk drive is available, it can be copied to the new disk drive. If not, new data must be generated by performing the "Receiver Calibration Adjustment."

A Error Terms

Information in This Appendix

Your PNA calculates error terms by measuring well-defined calibration devices over the frequency range of interest and comparing the measured data with an ideal model for the devices. The differences of the compared data represent systematic (repeatable) errors of the analyzer system. The analyzer calculates and stores these differences as error terms. These error terms are then removed from subsequent measurements when error correction is on.

NOTE For details on the various levels and theory of error-correction, refer to the embedded help in the analyzer.

Appendix A at-a-Glance

Section Title	Summary of Content	Start Page
Using Error Terms as a Diagnostic Tool	How to use error terms as a preventive maintenance and troubleshooting tool.	Page A-3
Performing Measurement Calibration	Procedure for measurement calibration. *Measurement calibration must be performed before you can use error terms as a tool.*	Page A-4
Using Flowgraphs to Identify Error Terms	Flowgraphs of the error terms for 1 port, 2 port, 3 port, and 4 port calibrations.	Page A-4
Accessing Error Terms	How to access error terms either manually or programmatically using the analyzer front panel or SCPI and COM/DCOM commands.	Page A-8
Error Term Data	Values of the error terms of your analyzer. Included are: • a table of error term values • description and significance of each error term • typical assembly failures	Page A-10

Using Error Terms as a Diagnostic Tool

By examining error terms, you can monitor system performance for preventive maintenance and troubleshooting purposes.

The magnitude and shape of the error terms are affected by:

- calibration kit devices
- cables
- adapters and accessories
- the assemblies from the signal separation group of the analyzer

Calibration kit devices, cables, and adapters and accessories are the most common cause of error term anomalies. Make sure of the following:

- Connectors must be clean, gaged, and within specification.
- Use proper connection technique during measurement and calibration. For information on connection technique and on cleaning and gaging connectors, refer to "Review the Principles of Connector Care" on page 3-5 or to the calibration kit's user's and service guide.

Preventive Maintenance

If you print or plot the error terms at set intervals (weekly, monthly and so forth), you can compare current error terms to these records. A stable system should generate repeatable error terms over long intervals, (for example, six months). Look for the following:

- A long-term trend often reflects drift, connector and cable wear, or gradual degradation, indicating the need for further investigation and preventive maintenance. Yet, the system may still conform to specifications. The cure is often as simple as cleaning and gaging connectors and cables.
- A sudden shift in error terms may indicate the need for troubleshooting.

Troubleshooting

You can use the error terms as a tool to isolate faulty assemblies in the signal separation group of your analyzer. You can compare the current values to preventive maintenance records or to the typical values listed in Table A-1 on page A-10.

To find assemblies related to error term failures, refer to error term descriptions in "Error Term Data" on page A-10. Each description lists common assemblies related to each error term. Identify the assembly and refer to Chapter 4, "Troubleshooting."

NOTE Always suspect calibration devices, cables, or improper connector maintenance as the primary cause of an error term anomaly.

Performing Measurement Calibration

A calibration must be performed to allow the analyzer to calculate the error terms before they can be used as a tool:

CAUTION Perform the following procedure only at a static-safe workstation, and wear a grounded wrist strap.

This is important. If not properly protected against, electrostatic discharge can seriously damage your analyzer, resulting in costly repair.

To reduce the chance of electrostatic discharge, follow all of the recommendations outlined in "Electrostatic Discharge Protection" on page 1-6, when performing the following calibration.

1. Connect a type-N cable to Port 2.
2. Perform a full 2-port calibration, **FULL SOLT 2-Port**. Refer to embedded help in the analyzer if necessary.

Using Flowgraphs to Identify Error Terms

Flowgraphs are a graphical representation of signal flow through the measurement path. The flowgraphs in Figure A-1 and Figure A-2 illustrate the error terms associated with measurement calibration.

Figure A-1 Flowgraph of One-Port Error Terms for Port 1

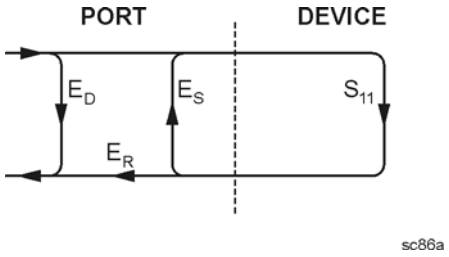

where:

E = Error term

Subscript:
D = Directivity
S = Source Match
R = Reflection Tracking

The error terms are the same for a one port measurement on Port 2 (S_{22}).

Figure A-2 Flowgraph of Two-Port Error Terms

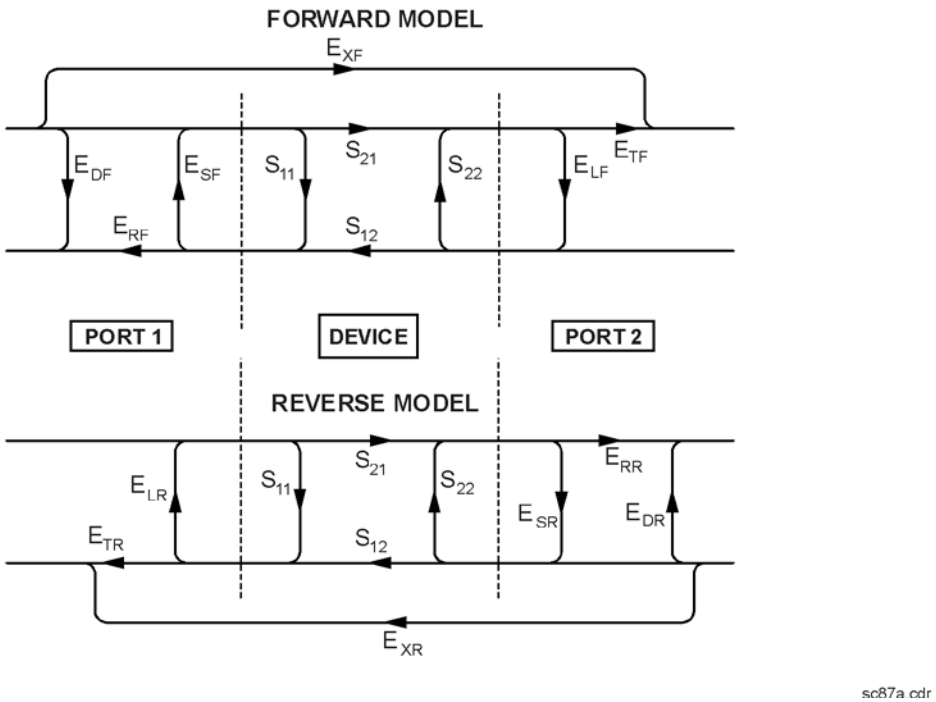

where:

E = error term

1st Subscript:
- D = Directivity
- S = Source Match
- R = Reflection Tracking
- X = Crosstalk (Isolation)
- L = Load Match
- T = Transmission Tracking

2nd Subscript:
- F = forward measurement (Ports 1–2, Ports 1–3, Ports 1–4, Ports 2–3, Ports 2–4, or Ports 3–4)
- R = reverse measurement (Ports 2–1, Ports 3–1, Ports 4–1, Ports 3 –2, Ports 4–2, or Ports 4–3)

Figure A-3 Flowgraph of Three-Port Error Terms

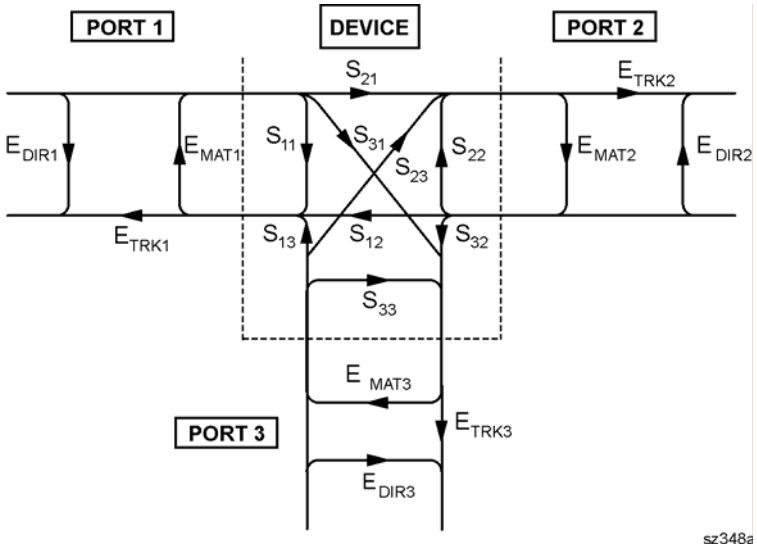

where:

E = error term
DIR = Directivity
MAT = Forward Source Match and Reverse Load Match
TRK = Forward Reflection Tracking and Reverse Transmission Tracking

For the case of a full 3-port calibration, port 1 has
three Match error terms:
- S11 source match
- S12 load match
- S13 load match

and three Tracking error terms:
- S11 reflection tracking
- S12 transmission tracking
- S13 transmission tracking

There are six isolation terms not shown.

Figure A-4 Flowgraph of Four-Port Error Terms

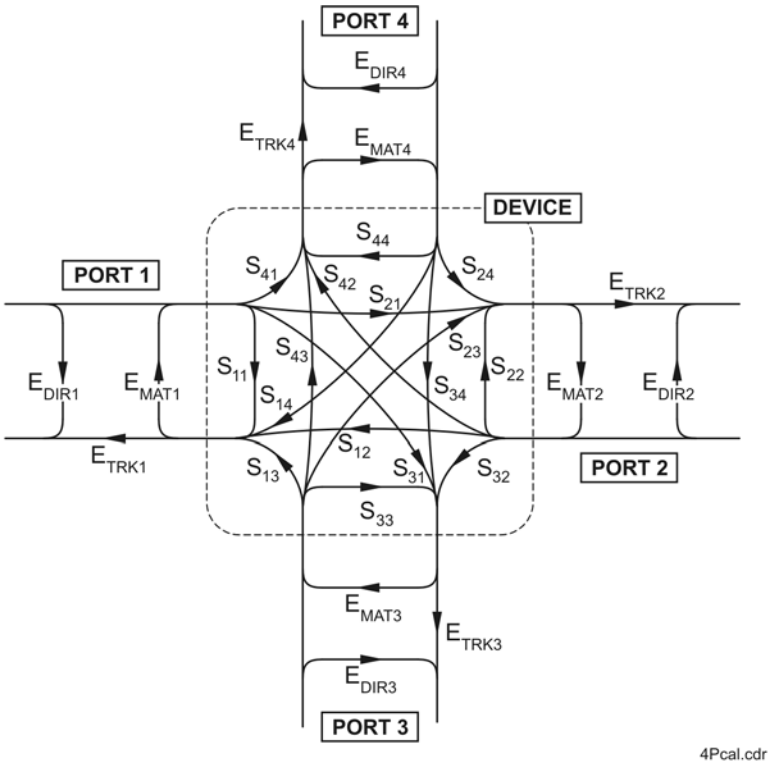

where:

E = error term
DIR = Directivity
MAT = Forward Source Match and Reverse Load Match
TRK = Forward Reflection Tracking and Reverse Transmission Tracking

For the case of a full 4-port calibration, port 1 has
four Match error terms:
- S11 source match
- S12 load match
- S13 load match
- S14 load match

and four Tracking error terms:
- S11 reflection tracking
- S12 transmission tracking
- S13 transmission tracking
- S12 transmission tracking

There are eight isolation (crosstalk) terms not shown.

Accessing Error Terms

Error terms can be accessed either manually or programmatically:

Manually

- "Front Panel Access to Error Terms" on page A-8

Programmatically

- "GPIB Access to Error Terms" on page A-9
- "COM/DCOM Access to Error Terms" on page A-9

Manual Access to Error Terms

Front Panel Access to Error Terms

NOTE Ensure the calibration correction is active by making sure that **Correction on/OFF** has a check-mark in the **Calibration** menu.

To access the error terms from the front panel, perform the following steps:

1. In the **System** menu, point to **Service**, **Utilities**, and then click **Cal Set Viewer**.

   The **Cal Set Viewer** toolbar appears directly above the trace window.
2. In the **Cal Set** list, select the desired cal set.
3. Click the **Standards/ETerms** button to toggle between viewing the raw measurement data from the standard or the corrected error term data. Note that the title of the center box in the tool bar will toggle between **Standard** and **Error Term**.
4. In the **Standard** or **Error Term** list, select the standard or error term to view. Click the **View** check box.
5. Compare the displayed measurement trace to previously measured data or to the uncorrected performance specifications listed in Table A-1 on page A-10.
6. Print numerical data or print a plot of the measurement results.

Programmatic Access to Error Terms

GPIB Access to Error Terms

You can access error terms by way of GPIB with Standard Commands for Programmable Instruments (SCPI).

For more information on GPIB and SCPI, refer to the embedded help in the analyzer. Type in keyword “errors, systematic” in the index.

COM/DCOM Access to Error Terms

You can access error terms by way of Component Object Model (COM) or Distributed Component Object Model (DCOM) software architecture.

For more information on COM and DCOM, refer to the embedded help in the analyzer. Type in keyword “errors, systematic” in the index.

Error Term Data

The error term descriptions in this section include the following information:

- a table of the error terms
- description and significance of each error term
- measurements affected by each error term
- typical cause of failure for each error term

The same description applies to both the forward (F) and reverse (R) terms.

IMPORTANT Data are listed here as a convenience only and are subject to change without notice. Detailed instrument specifications are listed in the embedded help in the network analyzer.

If Error Terms Seem Worse than Expected

To verify that the system still conforms to specifications, perform a system verification. Refer to Chapter 3, “Tests and Adjustments”.

Table A-1 Error Term Data[a]

Parameter	Frequency Range								
	300 kHz to 10 MHz[b]	**10 MHz to 1 GHz**	**1 GHz to 3 GHz**	**3 GHz to 5 GHz**	**5 GHz to 10.5 GHz**	**10.5 GHz to 11.5 GHz**	**11.5 GHz to 13.5 GHz**	**13.5 GHz to 16 GHz**	**16 GHz to 20 GHz**
Directivity	–23 dB	–28 dB	–25 dB	–20 dB	–17 dB		–15 dB		
Source Match	–8 dB	–12 dB	–12 dB	–12 dB	–12 dB	–10 dB	–8 dB		
Load Match	–9 dB	–20 dB	–20 dB	–18 dB	–12 dB		–7 dB		–7.5 dB
Parameter	**300 kHz to 5 MHz**	**5 MHz to 10 MHz**	**10 MHz to 45 MHz**	**45 MHz to 4 GHz**	**4 GHz to 6 GHz**	**6 GHz to 10.5 GHz**	**10.5 GHz to 13.5 GHz**	**13.5 GHz to 15 GHz**	**15 GHz to 20 GHz**
Crosstalk[c]	–70 dB	–100 dB	–110 dB	–122 dB	–123 dB	–120 dB	–115 dB		–110 dB

a. The data in this table are uncorrected system performance. The values apply over an environmental temperature range of 25 °C ±5 °C, with less than 1 °C deviation from the calibration temperature.
b. All values for 300 kHz to 10 MHz are typical.
c. All crosstalk values are typical. Measurement conditions: normalized to a thru, measured with two shorts, 10 Hz IF bandwidth, averaging factor of 8, alternate mode, source power set to the lesser of the maximum power out or the maximum receiver power.

Directivity (E_{DF} and E_{DR})

E_{DF} and E_{DR} are the uncorrected forward and reverse directivity error terms of the system. The directivity error of the test port is determined by measuring the S_{11} and S_{22} reflection of the calibration kit load. The load has a much better return loss specification than does the uncorrected test port. Therefore, any power detected from this measurement is assumed to be from directivity error.

The measurements most affected by directivity errors are measurements of low reflection devices.

Typical Cause of Failure

The *calibration kit load* is the most common cause of directivity specification failure.

If the load has been gaged and its performance independently verified, suspect the analyzer *test port coupler*.

To troubleshoot, refer to "Checking the Signal Separation Group" on page 4-45.

Figure A-5 Typical E_{DF}/E_{DR} Without Cables

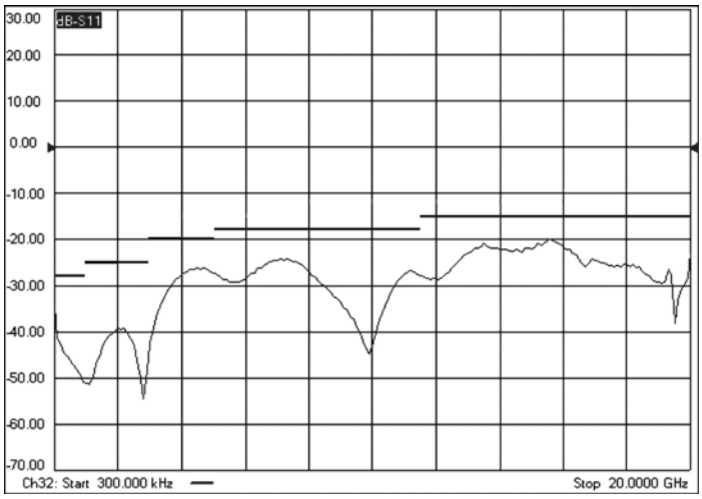

Source Match (E_{SF} and E_{SR})

E_{SF} and E_{SR} are the forward and reverse uncorrected source match terms of the driven port. They are obtained by measuring the reflection (S_{11}, S_{22}) of an open, and a short that are connected directly to the ports. Source match is a measure of the match of the coupler, as well as the match between all components from the source to the output port.

The measurements most affected by source match errors are reflection and transmission measurements of highly reflective DUTs.

Typical Cause of Failure

The *calibration kit open or shor*t is the most common cause of source match specification failure.

If the open or short performance has been independently verified, then suspect the analyzer *switch splitter, step attenuator, or coupler*.

To troubleshoot, refer to "Checking the Signal Separation Group" on page 4-45.

Figure A-6 Typical E_{SF}/E_{SR} Without Cables

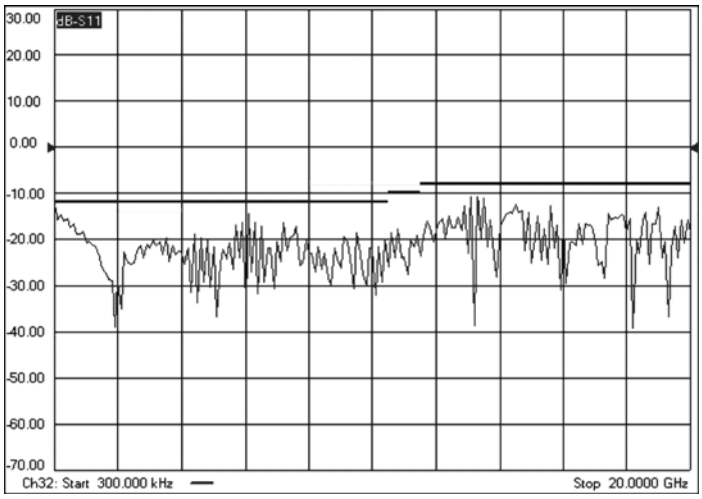

Load Match (E_{LF} and E_{LR})

Load match is a measure of the impedance match of the test port that terminates the output of a 2-port device. The match of test port cables is included in this response. Load match error terms are characterized by measuring the S_{11} and S_{22} responses of a "thru" configuration during the calibration procedure.

The measurements most affected by load match errors are all transmission measurements, and reflection measurements of a low insertion loss two-port device, such as an airline.

Typical Cause of Failure

The *calibration kit load or a bad "thru" cable* is the most common cause of load match specification failure.

If the load and cable performance are independently verified, then suspect the analyzer *test port coupler, step attenuator, or the test receiver* at the bad port.

To troubleshoot, refer to "Checking the Receiver Group" on page 4-49 or to "Checking the Signal Separation Group" on page 4-45.

Figure A-7 Typical E_{LF}/E_{LR}

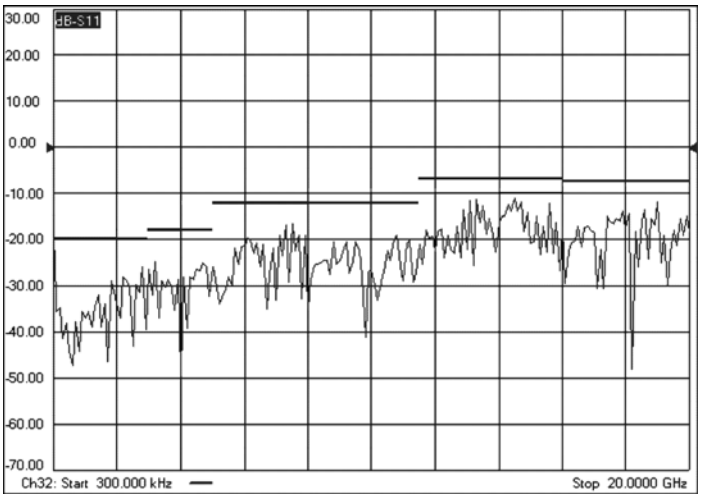

Isolation (Crosstalk) (E_{XF} and E_{XR})

Isolation, or crosstalk, is the uncorrected forward and reverse isolation error terms that represent leakage between the test ports and the signal paths. The isolation error terms are characterized by measuring transmission (S_{21}, S_{12}) with loads attached to both ports during the measurement calibration.isolation errors affect transmission measurements primarily where the measured signal level is very low.

The measurements most affected by isolation error terms are DUTs with large insertion loss. Since these terms are low in magnitude, they are usually noisy (not very repeatable).

Typical Cause of Failure

A *loose cable connection or leakage between components* in the test set are the most likely cause of isolation problems.

After verifying the cable and its connections, suspect the analyzer *switch splitter, step attenuator, coupler, or receivers, and associated cabling*.

To troubleshoot, refer to "Checking the Receiver Group" on page 4-49 or to "Checking the Signal Separation Group" on page 4-45.

B Option Enable Utility

Information in This Appendix

NOTE For more in-depth information on option enable, refer to the embedded help in the analyzer.

Appendix B at-a-Glance

Section Title	Summary of Content	Start Page
Accessing the Option Enable Utility	How to access the option enable utility within the analyzer's menu system.	Page B-3
Enabling or Removing Options	How to add or remove options from the analyzer's option list.	Page B-4
Repairing and Recovering Option Data	How to recover lost option data.	Page B-5
Installing or Changing a Serial Number	How to install a new serial number for the analyzer or change the existing serial number.	Page B-6

Accessing the Option Enable Utility

To start the option enable utility:

- On the **System** menu, point to **Service**, and then click **Option Enable**.
- The dialog box illustrated in Figure B-1 is displayed.

NOTE Some applications require a keyword that is provided by Agilent. If you do not have the required keyword, contact Agilent for assistance. Refer to "Contacting Agilent" on page 2-11.

Figure B-1 Option Enable Dialog Box

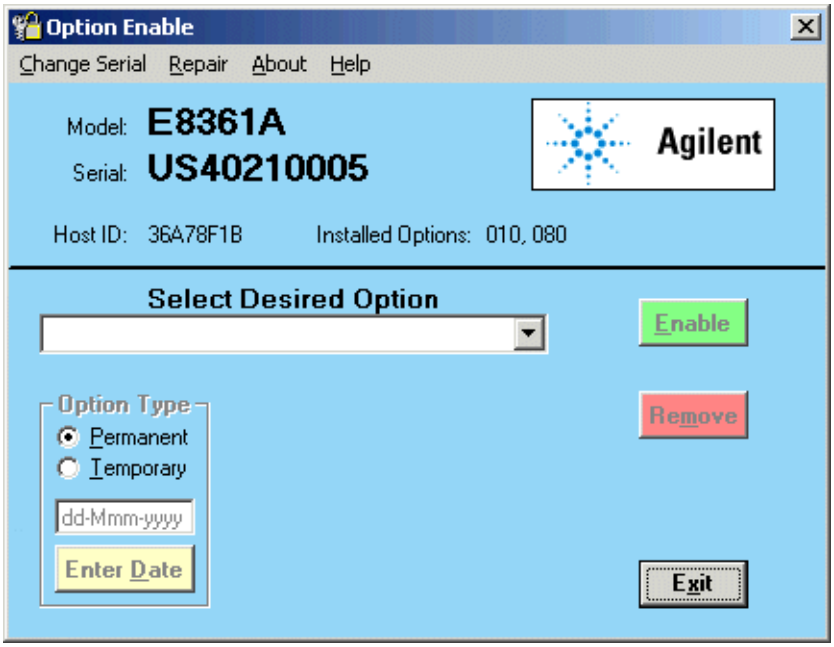

Option Entitlement Certificate

If you have received an "Option Entitlement Certificate", follow the instructions on the certificate, under "HOW TO USE THIS CERTIFICATE:", to obtain license key(s) for the option(s) listed on the certificate. See the important note below.

NOTE When upgrading from one model number to another, a new option entitlement certificate will be issued. When this certificate is redeemed for a license key, the automated system will ask for the instrument's Host ID. Be sure to use the new Host ID that is associated with the new model number. Using the current Host ID will cause a license to be generated that will not work with the instrument. To determine the new Host ID, use the utility at the below listed web site with the new model number.

http://na.tm.agilent.com/pna/upgrades.html

Enabling or Removing Options

There are two types of options:

- Hardware: Hardware options involve adding additional hardware to the analyzer. After the proper hardware has been installed in the analyzer, the option can be enabled using the option enable utility.

  It is necessary to re-enable all hardware options if the A16 test set motherboard is replaced.

- Software: Software options add features or functionality to the analyzer without the need for additional hardware. These options are enabled using a special keyword. They are enabled using the option enable utility.

  It is necessary to backup the software options if the A10 frequency reference board is replaced.

To enable or remove an option:

1. Start the option enable utility. Refer to "Accessing the Option Enable Utility" on page B-3.
2. Click the arrow in the **Select Desired Option** box. A list of available options, similar to the list below, will appear.

   010 - Time Domain

   UNL - Bias Tees w/Atten

   014 - Configurable Test Set

   080 - Frequency Offset Mode

   ??? - Enter Unlisted Option

3. Click on the option that you wish to either enable or remove, and then click **Enable** or **Remove**, whichever is appropriate.
4. If the desired option is not available in the list, select **Enter Unlisted Option**. A dialog box appears that will allow you to enter the option number. Enter the option number and follow the instructions on the display.

Repairing and Recovering Option Data

License, option, and model number data are stored in an EEPROM on the A10 frequency reference board and written into the `gen.lic` file on the hard disk drive. If the data stored in either of these items is lost, it can be recovered from the other item.

If the data on both the hard disk drive and the frequency reference board is lost, it can not be recovered. Contact Agilent for assistance. Refer to "Contacting Agilent" on page 2-11.

Recovery of Data After Repair

- If the A10 frequency reference board is replaced, use the **Repair** selection to recover data that has been lost as a result of the repair:
  1. Select **Repair** from the **Option Enable** menu bar (see Figure B-1).
  2. Click the **Freq Ref board has been replaced** check box.
  3. Click **Begin Repair**. The data is written from the `gen.lic` file into the EEPROM.
- If the hard disk drive is replaced, a new `gen.lic` file is automatically created when the **Network Analyzer** application starts, by retrieving the data from the EEPROM.

Recovery of Data if Option or Model Numbers are Incorrect

If the analyzer option or model numbers are not listed correctly on the analyzer display, in either the Option Enable Dialog Box or the About Network Analyzer display, you should regenerate the options license file, `gen.lic`:

1. Exit the **Network Analyzer** application.
2. Remove (or rename) the existing `gen.lic` file:
   a. Open **Windows Explorer** and navigate to `C:\Program Files\Agilent\Network Analyzer`.
   b. Delete (or rename) `gen.lic`.
3. Exit the **Windows Explorer** application.
4. Open the **Network Analyzer** application. The application will generate a new `gen.lic` file when it starts.
5. Check the option listing:
   a. On the **System** menu, point to **Service**, and then click **Option Enable**, or
   b. On the **Help** menu, click **About Network Analyzer**.
6. If the options are still not listed correctly, contact Agilent for assistance. Refer to "Contacting Agilent" on page 2-11.

Installing or Changing a Serial Number

It is necessary to reinstall the instrument serial number if the A16 test set motherboard is replaced.

IMPORTANT Use extreme care when entering the serial number, as only one attempt is allowed.

1. To change a serial number, select **Change Serial** from the **Option Enable** menu bar (see Figure B-1 on page B-3). The current serial number is displayed. If no serial number has previously been entered, the word “NONE” will be displayed.
2. Type the new serial number into the space provided, click **Serial**.

NOTE To change an incorrect serial number, a clear-code password is required. Contact Agilent to obtain the clear-code. Refer to “Contacting Agilent” on page 2-11.

C Firmware Upgrades

Information in This Appendix

This appendix provides instructions for installing firmware upgrades in your microwave PNA.

Appendix C at-a-Glance

Section Title	Summary of Content	Start Page
Downloading from the Internet	How to download firmware upgrades from the Internet.	Page C-2

How to Check the Current Firmware Version

1. With the **Network Analyzer** application running, click **Help**, **About Network Analyzer**.

   A dialog box showing the current installed Application Code Version is displayed.

2. To determine if a firmware update is available, proceed to "Downloading from the Internet."

Downloading from the Internet

If your network analyzer is connected to the Internet, there are two methods available for checking the availability of, and downloading, new firmware:

- Download directly from: `http://www.agilent.com/find/pna`. (Select your analyzer's model number in this website to view available upgrades.)
- On the **System** menu, point to **Service**, and then click **AgileUpdate**. **AgileUpdate** compares the firmware revision currently installed in your network analyzer to the latest version available and assists you in downloading and installing the most recent version. This is available only on analyzers with firmware revision A.01.20 and higher.

D Operating System Recovery

Recovering from Hard Disk Drive Problems

If you suspect that you have a hard disk drive problem, go to the “Hard Drive Recovery” link on the Agilent PNA Series: Service & Support Home Page on the Internet.

The URL for the Agilent PNA Series: Service & Support Home Page is:

http://na.tm.agilent.com/pna/

The URL for the Hard Drive Recovery page is:

http://na.tm.agilent.com/pna/hdrecovery.html

Index

Numerics

010, time domain option, 2-4
014, configurable test set option, 2-4
080, frequency offset mode option, 2-4
1284-C port
  rear panel connector, 5-29
  troubleshooting, 4-21
13.5 GHz frequency range, Option F13, 2-5
1CP, rack mount with handles option, 2-4
1E1, source attenuator option, 2-5
20 GHz frequency range, Option F20, 2-5
50-ohm load
  illustration, 6-19, 6-29
  part number, 6-18, 6-28
60-dB source step attenuator
  illustration, 6-25, 6-29
  operation, 5-17
  part number, 6-24, 6-28
  removal and replacement, 7-38
60-dB source step attenuator, second source
  illustration, 6-14, 6-15
  part number, 6-14
  removal and replacement, 7-40

A

A channel
  troubleshooting, 4-28
  typical power output, 4-45
A trace
  troubleshooting, 4-28, 4-31
A, B, and R1 traces
  troubleshooting, 4-31
A1 keypad assembly
  illustration, 6-9
  operation, 5-27
  part number, 6-8
  removal and replacement, 7-10
    procedure, 7-10
  test, 4-16, 4-18
  test values, 4-17
  troubleshooting, 4-16
A2 display assembly
  illustration, 6-9
  operation, 5-27
  part number, 6-8
  removal and replacement, 7-10
  troubleshooting, 4-12, 4-16
A3 front panel interface board
  illustration, 6-9
  operation, 5-27
  part number, 6-8
  removal and replacement, 7-10
  troubleshooting, 4-12, 4-16
A4 power supply assembly
  illustration, 6-11, 6-14, 6-15
  operation, 5-30
  part number, 6-10, 6-14
  removal and replacement, 7-14
  troubleshooting, 4-7
A5 SPAM board
  illustration, 6-11, 6-14, 6-15
  operation
    analog, 5-22
    digital, 5-28
  part number, 6-10, 6-14
  removal and replacement, 7-16
  troubleshooting, 4-49
A6 multiplier board
  illustration, 6-11, 6-14, 6-15
  operation, 5-9
  part number, 6-10, 6-14
  removal and replacement, 7-16
  test nodes, 4-33
  troubleshooting
    all bands, 4-41
A7 fractional-N synthesizer board
  illustration, 6-11, 6-14, 6-15
  operation, 5-9
  part number, 6-10, 6-14
  removal and replacement, 7-16
  test nodes, 4-34
  troubleshooting
    band 4, 4-39
    bands 0-3, 4-39
    bands 5-17, 4-40
A8 multiplier board
  illustration, 6-11, 6-14, 6-15
  operation, 5-9
  part number, 6-10, 6-14
  removal and replacement, 7-16
  test nodes, 4-33
  troubleshooting
    all bands, 4-42
A9 fractional-N synthesizer board
  illustration, 6-11, 6-14, 6-15
  operation, 5-9
  part number, 6-10, 6-14
  removal and replacement, 7-16
  test nodes, 4-34
  troubleshooting
    band 4, 4-41
    bands 0-3, 4-41
    bands 5-17, 4-42
A10 frequency reference board
  illustration, 6-11, 6-14, 6-15
  operation, 5-10
  part number, 6-10, 6-14
  removal and replacement, 7-16
  test nodes, 4-34
  troubleshooting, 4-38
A11 vertical motherboard
  illustration, 6-14, 6-15
  part number, 6-14
  removal and replacement, 7-18
A12 multiplier board
  illustration, 6-14, 6-15
  operation, 5-9
  part number, 6-14
  removal and replacement, 7-20
  troubleshooting
    all bands, 4-44
A13 fractional-N synthesizer board
  illustration, 6-14, 6-15
  operation, 5-9
  part number, 6-14
  removal and replacement, 7-20
  troubleshooting
    band 4, 4-43
    bands 0-3, 4-43
    bands 5-17, 4-44
A14 system motherboard
  illustration, 6-11, 6-14, 6-15
  operation, 5-27, 5-29, 5-30
  part number, 6-10, 6-14
  removal and replacement, 7-22
  troubleshooting, 4-9, 4-11
  voltage checks, 4-8
A15 CPU board
  illustration, 6-11, 6-14, 6-15
  operation, 5-28
  part numbers, 6-10, 6-14
  removal and replacement, 7-24
  troubleshooting, 4-9, 4-12, 4-20
A16 test set motherboard
  illustration, 6-21, 6-25, 6-29
  operation, 5-11
  part number, 6-20, 6-24, 6-28
  removal and replacement, 7-26
  test nodes, 4-35, 4-36
  troubleshooting, 4-35, 4-36
A17 QABC board
  illustration, 6-14, 6-15
  operation, 5-15
  part number, 6-14
  removal and replacement, 7-28
A18 MASS 26.5
  illustration, 6-14, 6-15
  operation, 5-9, 5-17
  part number, 6-14
  removal and replacement, 7-30
  troubleshooting, 4-46, 4-48
A19 MASS 26.5
  illustration, 6-21, 6-25, 6-29
  operation, 5-9, 5-17
  part number, 6-20, 6-24, 6-28
  removal and replacement, 7-32

troubleshooting, 4-46, 4-48
A20 mixer brick
illustration, 6-21, 6-25, 6-29
operation, 5-22
part number, 6-20, 6-24, 6-28
removal and replacement, 7-34
troubleshooting, 4-49
A21 test port 1 coupler
illustration, 6-21, 6-25, 6-29
operation, 5-17
part number, 6-20, 6-24, 6-28
removal and replacement, 7-36
troubleshooting, 4-46
A22 test port 2 coupler
illustration, 6-21, 6-25, 6-29
operation, 5-17
part number, 6-20, 6-24, 6-28
removal and replacement, 7-36
troubleshooting, 4-46
A23 test port 3 coupler
illustration, 6-21, 6-25, 6-29
operation, 5-17
part number, 6-20, 6-24, 6-28
removal and replacement, 7-36
troubleshooting, 4-46
A24 test port 4 coupler
illustration, 6-21, 6-25, 6-29
operation, 5-17
part number, 6-20, 6-24, 6-28
removal and replacement, 7-36
troubleshooting, 4-46
A25 source step attenuator
illustration, 6-25, 6-29
operation, 5-17
part number, 6-24, 6-28
removal and replacement, 7-38
troubleshooting, 4-46, 4-47, 4-48
A26 source step attenuator
illustration, 6-14, 6-15
operation, 5-17
part number, 6-14
removal and replacement, 7-40
troubleshooting, 4-46, 4-48
A29 reference switch
illustration, 6-29
operation, 5-22
part number, 6-28
removal and replacement, 7-42
troubleshooting, 4-50
A40 floppy disk drive
illustration, 6-37
operation, 5-29
part numbers, 6-36
removal and replacement, 7-44
A41 hard disk drive
illustration, 6-43
location of
illustration, 6-41
operation, 5-29
part numbers, 6-42
removal and replacement
procedure, 7-46
accessories
analyzer, 2-6
CD-RW drive, 2-6
in operator's check, 3-10
in test port cable checks, 3-12
USB
part numbers, 6-45
USB hub, 2-6
accuracy
dynamic accuracy test, 3-34
frequency test, 3-30
adapters
required for servicing, 2-8
adding
options, B-4
adjustments
frequency
at 10 MHz, 3-40
LO power, 3-41
receiver calibration, 3-43
source calibration, 3-42
system, 3-1, 3-40, B-1, C-1
getting ready, 3-4
administrator password
Agilent, 7-51
Agilent
administrator password, 7-51
contacting, 2-11
support, 2-10
all traces
troubleshooting, 4-31
analyzer
accessories, 2-6
block diagram
digital control group, 5-26
digital processor group, 5-26
receiver group, 5-23, 5-24
signal separation group, active, 5-19, 5-20
signal separation group, passive, 5-16
source group, 5-7
covers
illustration, 6-39
part numbers, 6-38
removal and replacement, 7-6
external replaceable parts
illustration, 6-39
part numbers, 6-38
feet
illustration, 6-39
part numbers, 6-38
frequency range and max ouput power, 5-4
frequency reference board assembly, 5-10
front panel interconnects, 5-27
functional groups, 5-3
digital control, 5-5
digital processing, 5-5
power supply, 5-5
receiver group, 5-5
signal separation, 5-5
synthesized source, 5-4
internal replaceable parts
illustration, 6-37
part numbers, 6-36
miscellaneous replaceable parts
part numbers, 6-44
mounting in equipment rack, 2-4
operation
configurable test set, Option 014, 5-18
CPU board, 5-28
data acquisition subgroup, 5-28
digital control group, 5-25
digital processor group, 5-25
display assembly, 5-27
floppy disk drive, 5-29
fractional-N synthesizer boards, 5-9
front panel interface board, 5-27
front panel subgroup, 5-27
hard disk drive, 5-29
keypad assembly, 5-27
main RAM, 5-28
MASS 26.5, 5-9, 5-17
mixer brick, 5-22
multiplier boards, 5-9
processing subgroup, 5-28
receiver group, 5-22
reference channel switch, 5-22
signal separation group, 5-16
source group, 5-6
source step attenuator, 5-17
SPAM board–analog, 5-22
SPAM board–digital, 5-28
test port couplers, 5-17
test set motherboard, 5-11
USB hub, 5-29
options, 2-3
understanding numbers, 2-3
QABC board, 5-15
rear panel
interconnects, 5-10, 5-11, 5-29

rear panel replaceable parts
illustration, 6-41
part numbers, 6-40
strap handle
illustration, 6-39
part number, 6-38
system block diagram, 5-3
system operation
theory of, 5-3
upgrades, 2-6
warmup time, 3-4
ANSI/NCSL Z540-1-1994
verification, 3-8
ANSI/NCSL Z540–1–1994
non-type verification, 3-9
assemblies
location of part numbers, 6-7
rebuilt-exchange
procedure, 6-5
rebuilt-exchange program, 6-5
replacement
cautions about, 7-4
list of procedures, 7-5
sequence, 6-4, 7-4
warnings about, 7-4
attenuator
source
operation, 5-17
attenuator bracket
illustration, 6-35
part number, 6-34
attenuators
required for servicing, 2-8
AUX I/O connector
pin assignments, 5-14
rear panel, 5-11

B

B channel
troubleshooting, 4-28
typical power output, 4-45
B trace
troubleshooting, 4-28, 4-31
B1 fan
removal and replacement, 7-53
band modes
troubleshooting
all bands, 4-41, 4-42, 4-44
band 4, 4-39, 4-41, 4-43
bands 0-3, 4-39, 4-41, 4-43
bands 5-17, 4-40, 4-42, 4-44
battery disposal, 1-8
before applying power, 1-3
block diagram
configurable test set,
Option 014, 5-19, 5-20
digital control group, 5-26
digital processor group, 5-26
receiver group, 5-23, 5-24
signal separation group, active,
5-19, 5-20
signal separation group,
passive, 5-16
source group, 5-7
bottom assembly, all options
hardware
illustration, 6-35
part numbers, 6-34
bottom assembly, Option 140/240
replaceable cables
illustration, 6-23
part numbers, 6-22
replaceable parts
illustration, 6-21
part numbers, 6-20
bottom assembly, Option 145/245
replaceable cables
illustration, 6-27
part numbers, 6-26
replaceable parts
illustration, 6-25
part numbers, 6-24
bottom assembly, Option 146/246
replaceable cables
illustration, 6-31
part numbers, 6-30
replaceable parts
illustration, 6-29
part numbers, 6-28
bracket
attenuator
illustration, 6-35
part number, 6-34
broadband failure, 4-37

C

C channel
troubleshooting, 4-28
typical power output, 4-45
C trace
troubleshooting, 4-28, 4-31
C, D, and R3 traces
troubleshooting, 4-31
cable
substitution, 3-23
test port
checks, 3-10, 3-12, 3-13, 3-14,
3-15, 3-17
connector repeatability
failure, 3-18
insertion loss failure, 3-14
magnitude and phase stability
failure, 3-16
return loss failure, 3-13
cables
GPIB
part numbers, 6-44
in bottom assembly, Option
140/240
illustration, 6-23
part numbers, 6-22
in bottom assembly, Option
145/245
illustration, 6-27
part numbers, 6-26
in bottom assembly, Option
146/246
illustration, 6-31
part numbers, 6-30
in top assembly, all options
except 146/246
illustration, 6-13
part numbers, 6-12
in top assembly, Options
146/246
illustration, 6-17, 6-19
part numbers, 6-16, 6-18
required for servicing, 2-8
calibration
certificate of, 3-7
coefficients test, 3-33
commercial, Option R-50C-001,
2-10
kits, 2-8, 3-7
substitution, 3-23
measurement, A-4
options available, 2-10
receiver, 3-43
source, 3-42
standards compliant,
Option R-50C-002, 2-10
care of connectors, 3-5
caution, 1-3
CD-RW drive, 2-6
CE mark, 1-7
certificate of calibration, 3-7
changing
a serial number, B-6
channel A
troubleshooting, 4-28, 4-45
typical power output, 4-45
channel B
troubleshooting, 4-28, 4-45
typical power output, 4-45
channel C
troubleshooting, 4-28, 4-45
typical power output, 4-45
channel D
troubleshooting, 4-28, 4-45
typical power output, 4-45
channel R
troubleshooting, 4-28

checks
cable
connector repeatability, failure of, 3-18
insertion loss, failure of, 3-14
magnitude and phase stability, failure of, 3-16
return loss, failure of, 3-13
test port cables, 3-10, 3-12
operator's, 3-10
accessories used in, 3-10
dialog box, 3-11
failure of, 3-11
performing, 3-10
Port 1, 3-10
Port 2, 3-10
preliminary, 3-10
system, 3-1, B-1, C-1
getting ready, 3-4
test port cable
accessories used in, 3-12
connector repeatability, 3-17
insertion loss, 3-14
magnitude and phase stability, 3-15
performing, 3-12
return loss, 3-13
COM, A-9
commercial calibration, Option R-50C-001, 2-10
compression test, receiver, 3-31
configurable test set, Option 014
block diagram, 5-19, 5-20
description of, 2-4
operation, 5-18
configuration
high dynamic range
active measurement, 5-21
diagram, 5-21
normal
active measurement, 5-18
Option 014, 5-18
connector
care
principles of, 3-5
quick reference, 3-5
protective end caps
part numbers, 6-44
repeatability check
failure of, 3-18
of test port cables, 3-17
connector repeatability
check
test port cables, 3-17
connectors
care of, 3-5
front panel, 5-27
Probe Power, 5-27
USB, 5-27
rear panel, 5-10, 5-11, 5-29
1284-C, 5-29
AUX I/O, 5-11, 5-14
Display, 5-29
EXT 10 MHz REF IN, 5-10
EXT 10 MHz REF OUT, 5-10
GPIB, 5-29
HANDLER I/O, 5-11, 5-13
PARALLEL, 5-29
RS-232, 5-29
SERIAL, 5-29
TEST SET I/O, 5-11, 5-12
TRIG IN, 5-11
TRIG OUT, 5-11
USB, 5-29
VGA, 5-29
contacting Agilent, 2-11
controllers
troubleshooting with, 4-22
coupler
port 1
illustration, 6-21, 6-25, 6-29
part number, 6-20, 6-24, 6-28
troubleshooting, 4-46
port 2
illustration, 6-21, 6-25, 6-29
part number, 6-20, 6-24, 6-28
troubleshooting, 4-46
port 3
illustration, 6-21, 6-25, 6-29
part number, 6-20, 6-24, 6-28
troubleshooting, 4-46
port 4
illustration, 6-21, 6-25, 6-29
part number, 6-20, 6-24, 6-28
troubleshooting, 4-46
cover, removing, 1-4
covers, analyzer
illustration, 6-39
part numbers, 6-38
removal and replacement, 7-6
CPU board
illustration, 6-11
operation, 5-28
part numbers, 6-10, 6-14, 6-15
removal and replacement, 7-24
troubleshooting, 4-12, 4-20
cross-over cable, LAN, 4-24
CSA mark, 1-7

D

D channel
troubleshooting, 4-28
typical power output, 4-45
D trace
troubleshooting, 4-28, 4-31
dangerous voltage, 1-4
data acquisition
operation, 5-28
data acquisition and processing
subgroup, 5-25
data storage
floppy disk, 5-29
hard disk, 5-29
IDE, 5-29
data, option
recovering, B-5
repairing, B-5
DC block
illustration, 6-29
part number, 6-28
removal and replacement, 7-42
DCOM, A-9
description
functional
digital control group, 5-5
digital processing group, 5-5
power supply group, 5-5
receiver group, 5-5
signal separation group, 5-5
synthesized source group, 5-4
digital control group
block diagram, 5-26
functional description of, 5-5
operation, 5-25
digital processing and control
functional group, 5-3
digital processing group
block diagram, 5-26
functional description of, 5-5
operation, 5-25
directivity
cause of failure, A-11
definition of, A-11
measurements affected by, A-11
disabling
options, B-4
disk drive, floppy
removal and replacement, 7-44
disk drive, hard
copying files from, 7-46
removal and replacement, 7-46
unique files located on, 7-46
display assembly
illustration, 6-9
operation, 5-27
parts list, 6-8
removal and replacement, 7-10
troubleshooting, 4-12, 4-16
display inverter
removal and replacement, 7-12
display lamp
removal and replacement, 7-12
Display port
rear panel connector, 5-29

display test
running, 4-18
documentation
optional, 1-iv
part numbers, 6-44
standard, 1-iv
dynamic range, high
active measurement configuration, 5-21

E

earth ground, 1-3
electrostatic discharge, *See ESD*
EMI/RFI
supplies
part numbers, 6-45
enabling
options, B-4
environment, operating
specifications, 3-4
verification, 3-4
equipment rack
horizontal spacing, 2-4
mounting analyzer in, 2-4
equipment, service test
required, 2-7
error terms
access to, A-8
via COM/DCOM commands, A-9
via front panel, A-8
via SCPI commands (using GPIB), A-9
cause of failure to, A-3
descriptions, A-10
directivity, A-11
flowgraph of one port, A-4
flowgraph of two port, A-5, A-6, A-7
identifying using flowgraphs, A-4
isolation, A-14
load match, A-13
magnitude
affected by, A-3
monitoring over time, A-3
shape affected by, A-3
source match, A-12
typical data, A-10
using as diagnostic tool, A-3
using to aid troubleshooting, A-3
worse than typical values, A-10
ESD
protection, 1-6, 3-4, 4-3, 7-3, A-4
supplies
part numbers, 6-45
exchange
module
procedure, 6-5
rebuilt assemblies
program, 6-5
EXT 10 MHz REF IN connector
rear panel, 5-10
EXT 10 MHz REF OUT connector
rear panel, 5-10
extended power range, Option 1E1, 2-5
extender board
measurement points, 4-8
voltages, 4-8
external analyzer
replaceable parts
illustration, 6-39
part numbers, 6-38
external monitor, 4-12

F

F13, 13.5 GHz frequency range option, 2-5
F20, 20 GHz frequency range option, 2-5
failure
broadband, 4-37
of connector repeatability check, 3-18
of insertion loss check, 3-14
of magnitude and phase stability check, 3-16
of operator's check, 3-11
of return loss check, 3-13
of system verification, 3-25
flowchart, 3-25
single vs. broadband, 4-37
fan
troubleshooting, 4-11
feet
analyzer
illustration, 6-39
part numbers, 6-38
firmware upgrade
downloading from the internet, C-2
floppy disk drive
data storage, 5-29
illustration, 6-37
operation, 5-29
part number, 6-36
removal and replacement, 7-44
flowgraph
of one port error terms, A-4
of two port error terms, A-5, A-6, A-7
using to identify error terms, A-4
Fourier transform, 2-4
fractional-N synthesizer board
illustration, 6-11, 6-14, 6-15
operation, 5-9
part number, 6-10, 6-14
removal and replacement, 7-16
test nodes, 4-34
troubleshooting
band 4, 4-39, 4-41, 4-43
bands 0-3, 4-39, 4-41, 4-43
bands 5-17, 4-40, 4-42, 4-44
fractional-N synthesizer board, second source
illustration, 6-14, 6-15
part number, 6-14
removal and replacement, 7-20
frequency accuracy
test, 3-30
frequency adjustment
at 10 MHz, 3-40
frequency offset mode, Option 080, 2-4
frequency range
and max output power, 5-4
frequency reference board
illustration, 6-11, 6-14, 6-15
operation, 5-10
part number, 6-10, 6-14
removal and replacement, 7-16
test nodes, 4-34
troubleshooting, 4-38
front panel
connectors
Probe Power, 5-27
USB, 5-27
interconnects, 5-27
knob
illustration, 6-9
part number, 6-8
test, 4-18
troubleshooting, 4-16
LED board
illustration, 6-35
part number, 6-34
operation, 5-27
speaker, 5-27
subgroup, 5-25
USB
troubleshooting, 4-16, 4-20
front panel assembly
removal and replacement, 7-8
replaceable parts
illustration, 6-9
part numbers, 6-8
front panel interface board
illustration, 6-9
operation, 5-27
part number, 6-8
removal and replacement, 7-10

troubleshooting, 4-12, 4-16
front panel knob
test, 4-16
front panel subassemblies
removal and replacement, 7-10
functional groups, 5-3
fuses, 6-44

G

general safety considerations, 1-3
GPIB, A-9
cables
part numbers, 6-44
port
rear panel connector, 5-29
running test software, 4-21
troubleshooting, 4-21
systems check, 4-21
ground, safety earth, 1-3
groups
functional, 5-3

H

handle
damaged, 1-3
kits
part numbers, 6-45
HANDLER I/O
connector
pin assignments, 5-13
rear panel, 5-11
handles
with rack mount, 2-4
hard disk drive
copying files from, 7-46
data storage, 5-29
illustration, 6-43
installing backup files onto, 7-52
location of
illustration, 6-41
operation, 5-29
part number, 6-42
removal and replacement, 7-46
replaceable parts
illustration, 6-43
part numbers, 6-42
unique files located on, 7-46
hardware
in bottom assembly
illustration, 6-35
part numbers, 6-34
in external analyzer
illustration, 6-39
part numbers, 6-38
in hard disk drive assembly
illustration, 6-43
part numbers, 6-42
in internal analyzer
illustration, 6-37
part numbers, 6-36
in rear panel assembly
illustration, 6-41
part numbers, 6-40
in top assembly
illustration, 6-32, 6-33
part numbers, 6-32
location of part numbers, 6-7
options, 2-3, B-4
high dynamic range
active measurement configuration, 5-21
configuration
diagram, 5-21

I

IDE
data storage, 5-29
illustration
hardware
in bottom assembly, 6-35
in external analyzer, 6-39
in hard disk drive, 6-43
in internal analyzer, 6-37
in rear panel assembly, 6-41
in top assembly, all options, 6-32, 6-33
replaceable cables
in bottom assembly, Option 140/240, 6-23
in bottom assembly, Option 145/245, 6-27
in bottom assembly, Option 146/246, 6-31
in top assembly, all options except 146/246, 6-13
in top assembly, Options 146/246, 6-17, 6-19
replaceable parts
analyzer covers, 6-39
analyzer feet, 6-39
analyzer strap handle, 6-39
in bottom assembly, all options, 6-35
in bottom assembly, Option 140/240, 6-21
in bottom assembly, Option 145/245, 6-25
in bottom assembly, Option 146/246, 6-29
in external analyzer, 6-39
in front panel assembly, 6-9
in hard disk drive assembly, 6-43
in internal analyzer, 6-37
in rear panel assembly, 6-41
in top assembly, all options, 6-32, 6-33
in top assembly, all options except 146/246, 6-11
in top assembly, Options 146/246, 6-14, 6-15
insertion loss
check
failure of, 3-14
test port cables, 3-14
installing
a serial number, B-6
instruction documentation symbol, 1-7
instrument markings, 1-7
instrument specifications, 3-6
interconnects
AUX I/O
pin assignments, 5-14
front panel, 5-27
Probe Power, 5-27
USB, 5-27
HANDLER I/O
pin assignments, 5-13
rear panel, 5-10, 5-11, 5-29
1284-C, 5-29
AUX I/O, 5-11
Display, 5-29
EXT 10 MHz REF IN, 5-10
EXT 10 MHz REF OUT, 5-10
GPIB, 5-29
HANDLER I/O, 5-11
LAN, 5-29
PARALLEL, 5-29
RS-232, 5-29
SERIAL, 5-29
TEST SET I/O, 5-11
TRIG IN, 5-11
TRIG OUT, 5-11
USB, 5-29
VGA, 5-29
TEST SET I/O
pin assignments, 5-12
internal analyzer
replaceable hardware
illustration, 6-37
part numbers, 6-36
replaceable parts
illustration, 6-37
part numbers, 6-36
IP address, LAN, 4-22
ISM1-A mark, 1-7
isolation
cause of failure, A-14
definition of, A-14
measurements affected by, A-14

K

keypad assembly
illustration, 6-9
operation, 5-27
part number, 6-8
removal and replacement, 7-10
procedure, 7-10
test, 4-16, 4-18
troubleshooting, 4-16
kits
calibration, 2-8, 3-7
handle
part numbers, 6-45
rack mount
part numbers, 6-45
upgrade
part numbers, 6-45
verification, 2-8, 3-7
knob
front panel
illustration, 6-9
part number, 6-8
test, 4-16, 4-18
troubleshooting, 4-16

L

LAN
connector
rear panel, 5-29
cross-over cable, 4-24
IP address, 4-22
ping command, 4-22
ping to and from, 4-22
subnet mask, 4-22
testing between analyzers, 4-24
troubleshooting, 4-22
LCD display
troubleshooting, 4-12
LED board, front panel
illustration, 6-35
part number, 6-34
limiter
illustration, 6-29
part number, 6-28
removal and replacement, 7-42
linearity
source power
test, 3-29
test port output power
test, 3-29
lithium battery disposal, 1-8
LO power
adjustment, 3-41
load match
cause of failure, A-13
definition of, A-13
measurements affected by, A-13
load, 50-ohm
illustration, 6-19, 6-29
part number, 6-18, 6-28
locating
assembly part numbers, 6-7
hardware part numbers, 6-7
miscellaneous part numbers, 6-7
replaceable part numbers
by reference designator, 6-6
by type of part, 6-7

M

machine screws
in bottom assemblies
illustration, 6-35
part numbers, 6-34
in external analyzer
illustration, 6-39
part numbers, 6-38
in hard disk drive assembly
illustration, 6-43
part numbers, 6-42
in rear panel assembly
illustration, 6-41
part numbers, 6-40
magnitude check
failure of, 3-16
test port cables, 3-15
maintenance
cleaning, 2-3
preventive
effect on error terms, A-3
MASS 26.5
illustration, 6-14, 6-15, 6-21, 6-25, 6-29
operation, 5-9, 5-17
part number, 6-14, 6-20, 6-24, 6-28
removal and replacement, 7-30, 7-32
troubleshooting, 4-46, 4-48
MASSQuad
illustration, 6-14, 6-15, 6-21, 6-25, 6-29
operation, 5-9, 5-17
part number, 6-14, 6-20, 6-24, 6-28
removal and replacement, 7-30, 7-32
troubleshooting, 4-46, 4-48
max output power
and frequency range, 5-4
measurement
calibration, A-4
traceability, 3-21
path, 3-21
uncertainty, 3-20
measurement configuration
active
high dynamic range, 5-21
normal, 5-18
measurement system
troubleshooting, 4-26
measuring
high-dynamic range devices, 2-4
high-power devices, 2-4
memory modules
part numbers, 6-45
midweb
removal and replacement, 7-53
midweb fans
troubleshooting, 4-11
miscellaneous parts
location of part numbers, 6-7
required for servicing, 2-9
miscellaneous replaceable parts
part numbers, 6-44
mixer brick
illustration, 6-21, 6-25, 6-29
operation, 5-22
part number, 6-20, 6-24, 6-28
removal and replacement, 7-34
troubleshooting, 4-49
module
exchange
procedure, 6-5
monitor, external, 4-12
motherboard, system
illustration, 6-11, 6-14, 6-15
operation, 5-27
part number, 6-10, 6-14
removal and replacement, 7-22
troubleshooting, 4-11
motherboard, test set
illustration, 6-21, 6-25, 6-29
part number, 6-20, 6-24, 6-28
multiplier board
illustration, 6-11, 6-14, 6-15
operation, 5-9
part number, 6-10, 6-14
removal and replacement, 7-16
test nodes, 4-33
troubleshooting
all bands, 4-41, 4-42, 4-44
multiplier board, second source
illustration, 6-14, 6-15
part number, 6-14
removal and replacement, 7-20

N

network analyzer, ***See analyzer***
noise floor, test, 3-32
noise, trace noise test, 3-30

Non-ANSI/NCSL Z540-1-1994
verification, 3-9

O

OCXO (oven-controlled crystal oscillator)
frequency adjustment, 3-40
theory of operation, 5-10
operating
system
recovery, D-1
operating environment
specifications, 3-4
verification, 3-4
operation
configurable test set, Option 014, 5-18
CPU board, 5-28
data acquisition, 5-28
digital control, 5-25
digital processor, 5-25
display assembly, 5-27
floppy disk drive, 5-29
fractional-N synthesizer boards, 5-9
frequency reference board, 5-10
front panel, 5-27
front panel interface board, 5-27
hard disk drive, 5-29
keypad assembly, 5-27
main RAM, 5-28
MASS 26.5, 5-9, 5-17
mixer brick, 5-22
multiplier boards, 5-9
power supply, 5-30
processing subgroup, 5-28
QABC board, 5-15
receiver group, 5-22
reference channel switch, 5-22
signal separation group, 5-16
source group, 5-6
SPAM board–analog, 5-22
SPAM board–digital, 5-28
step attenuator
source, 5-17
system motherboard, 5-27
test port couplers, 5-17
test set motherboard, 5-11
USB hub, 5-29
operator's check, 3-10
accessories used in, 3-10
dialog box, 3-11
failure of, 3-11
performing, 3-10
Port 1, 3-10
Port 2, 3-10
option
analyzer, 2-3
understanding numbers, 2-3
calibration, 2-10
data
recovering, B-5
repairing, B-5
enable utility
accessing, B-3
dialog box, B-3
enabling and removing, B-4
hardware, B-4
service and support, 2-10
software, B-4
Option 010, time domain, 2-4
Option 014, configurable test set, 2-4
block diagram, 5-19, 5-20
normal configuration, 5-18
operation, 5-18
Option 080, frequency offset mode, 2-4
Option 140/240
description of, 2-3
replaceable cables, in bottom assembly
illustration, 6-23
part numbers, 6-22
replaceable cables, in top assembly
illustration, 6-13
part numbers, 6-12
replaceable parts, in bottom assembly
illustration, 6-21
part numbers, 6-20
replaceable parts, in top assembly
illustration, 6-11
part numbers, 6-10
Option 145/245
description of, 2-3
replaceable cables, in bottom assembly
illustration, 6-27
part numbers, 6-26
replaceable cables, in top assembly
illustration, 6-13
part numbers, 6-12
replaceable parts, in bottom assembly
illustration, 6-25
part numbers, 6-24
replaceable parts, in top assembly
illustration, 6-11
part numbers, 6-10
Option 146/246
description of, 2-3
replaceable cables, in bottom assembly
illustration, 6-31
part numbers, 6-30
replaceable cables, in top assembly
illustration, 6-17, 6-19
part numbers, 6-16, 6-18
replaceable parts, in bottom assembly
illustration, 6-29
part numbers, 6-28
replaceable parts, in top assembly
illustration, 6-14, 6-15
part numbers, 6-14
Option 1CM, rack mount without handles, 2-4
Option 1CM, rack mount without handles option, 2-4
Option 1CP, rack mount with handles, 2-4
Option 1E1, source attenuator
description of, 2-5
operation, 5-17
Option F13, 13.5 GHz frequency range, 2-5
Option F20, 20 GHz frequency range, 2-5
Option S02, second source, 2-5
Option R-50C-001
commercial calibration, 2-10
Option R-50C-002
standards compliant calibration, 2-10
ordering information
options and upgrades, 2-3, 2-6
replaceable parts, 6-3
output power, source
accuracy test, 3-28
linearity, 3-29
maximum test, 3-29
output power, test port
accuracy test, 3-28
linearity, 3-29
maximum test, 3-29

P

pads
required for servicing, 2-8
paint
touch-up
part numbers, 6-46
PARALLEL
port
rear panel connector, 5-29

troubleshooting, 4-21
part numbers
accessories
USB, 6-45
cables
GPIB, 6-44
documentation, 6-44
hardware
in bottom assembly, 6-34
in external analyzer, 6-38
in hard disk drive, 6-42
in internal analyzer, 6-36
in rear panel assembly, 6-40
in top assembly, all options, 6-32
kits
handle, 6-45
rack mount, 6-45
locating
by reference designator, 6-6
by type of part, 6-7
for assemblies, 6-7
for hardware, 6-7
for miscellaneous parts, 6-7
paint
touch-up, 6-46
protective end caps
for connectors, 6-44
replaceable cables
in bottom assembly, Option 140/240, 6-22
in bottom assembly, Option 145/245, 6-26
in bottom assembly, Option 146/246, 6-30
in top assembly, all options except 146/246, 6-12
in top assembly, Options 146/246, 6-16, 6-18
replaceable parts
analyzer covers, 6-38
analyzer feet, 6-38
analyzer strap handle, 6-38
in bottom assembly, all options, 6-34
in bottom assembly, Option 140/240, 6-20
in bottom assembly, Option 145/245, 6-24
in bottom assembly, Option 146/246, 6-28
in external analyzer, 6-38
in front panel assembly, 6-8
in hard disk drive assembly, 6-42
in internal analyzer, 6-36
in rear panel assembly, 6-40
in top assembly, all options, 6-32
in top assembly, all options except 146/246, 6-10
in top assembly, Options 146/246, 6-14
miscellaneous analyzer, 6-44
supplies
EMI/RFI, 6-45
ESD, 6-45
memory modules, 6-45
tools
service, 6-44
upgrade kits, 6-45
parts
in bottom assembly
illustration, 6-35
part numbers, 6-34
in bottom assembly, Option 140/240
illustration, 6-21
part numbers, 6-20
in bottom assembly, Option 145/245
illustration, 6-25
part numbers, 6-24
in bottom assembly, Option 146/246
illustration, 6-29
part numbers, 6-28
in external analyzer
illustration, 6-39
part numbers, 6-38
in front panel assembly
illustration, 6-9
part numbers, 6-8
in hard disk drive assembly
illustration, 6-43
part numbers, 6-42
in internal analyzer
illustration, 6-37
part numbers, 6-36
in rear panel assembly
illustration, 6-41
part numbers, 6-40
in top assembly, all options
illustration, 6-32, 6-33
part numbers, 6-32
in top assembly, all options except 146/246
illustration, 6-11
part numbers, 6-10
in top assembly, Options 146/246
illustration, 6-14, 6-15
part numbers, 6-14
locating
by reference designator, 6-6
by type of part, 6-7
miscellaneous
part numbers, 6-44
required for servicing, 2-9
replaceable
listing of, 6-6
ordering information, 6-3
parts, hardware
in bottom assembly
illustration, 6-35
part numbers, 6-34
in external analyzer, all options
illustration, 6-39
part numbers, 6-38
in hard disk drive assembly, all options
illustration, 6-43
part numbers, 6-42
in internal analyzer, all options
illustration, 6-37
part numbers, 6-36
in rear panel assembly, all options
illustration, 6-41
part numbers, 6-40
in top assembly, all options
illustration, 6-32, 6-33
part numbers, 6-32
password
Agilent administrator, 7-51
performance
tests, 3-28
calibration coefficients, 3-33
description of, 3-7
dynamic accuracy, 3-34
frequency accuracy, 3-30
noise floor, 3-32
power meter accuracy, 3-35
receiver compression, 3-31
source maximum power output, 3-29
source power accuracy, 3-28
source power linearity, 3-29
test port output maximum power, 3-29
test port output power accuracy, 3-28
test port output power linearity, 3-29
trace noise, 3-30
verification
ANSI/NCSL Z540-1-1994, 3-8
non-ANSI/NCSL Z540-1-1994, 3-9
phase stability check
failure of, 3-16
test port cables, 3-15

pin assignments
connectors
AUX I/O, 5-14
HANDLER I/O, 5-13
TEST SET I/O, 5-12
ping
command, LAN, 4-22
from network, 4-23
to analyzer, 4-22
pixel
damaged, 4-18
definition, 4-18
plenum
removal and replacement, 7-18
plenum bracket
removal and replacement, 7-18
Port 1
check, 3-10
typical power output, 4-45
Port 2
check, 3-10
typical power output, 4-45
Port 3
typical power output, 4-45
Port 4
typical power output, 4-45
post-repair procedures, 7-56
power meter accuracy test, 3-35
power supply
check, 4-7
functional description of, 5-5
functional group, 5-3
if all voltages are missing, 4-9
operation, 5-30
voltage checks, 4-8
power supply assembly
illustration, 6-11, 6-14, 6-15
part number, 6-10, 6-14
removal and replacement, 7-14
troubleshooting, 4-7
power, source
accuracy test, 3-28
linearity test, 3-29
power, source output
maximum test, 3-29
power, test port output
accuracy test, 3-28
linearity test, 3-29
maximum test, 3-29
pre-repair
procedures
caution about, 7-3
warnings about, 7-3
preventive maintenance
effect on error terms, A-3
probe power
connector, 5-27
measurement points, 4-7
troubleshooting, 4-16
processing subgroup
operation, 5-28
protection
against EMI/RFI, 6-45
against ESD, 1-6, 3-4, 4-3, 7-3, A-4
protective end caps
for connectors
part numbers, 6-44

Q

QABC board
illustration, 6-14, 6-15
operation, 5-15
part number, 6-14
removal and replacement, 7-28
QuintBrick
illustration, 6-21, 6-25, 6-29
operation, 5-22
part number, 6-20, 6-24, 6-28
Quintbrick
removal and replacement, 7-34

R

R channel
troubleshooting, 4-28
R trace
troubleshooting, 4-28, 4-31
rack mount kits
part numbers, 6-45
with handles, Option 1CP, 2-4
without handles, Option 1CM, 2-4
RAM, main
operation, 5-28
rear panel
connectors
1284-C, 5-29
AUX I/O, 5-11
Display, 5-29
EXT 10 MHz REF IN, 5-10
GPIB, 5-29
HANDLER I/O, 5-11
LAN, 5-29
PARALLEL, 5-29
RS-232, 5-29
SERIAL, 5-29
TEST SET I/O, 5-11
TRIG IN, 5-11
TRIG OUT, 5-11
USB, 5-29
VGA, 5-29
interconnects, 5-10, 5-11, 5-29
replaceable parts
illustration, 6-41
part numbers, 6-40
troubleshooting, 4-20
rebuilt-exchange assemblies
program, 6-5
receiver
accuracy
dynamic accuracy test, 3-34
calibration, 3-43
compression test, 3-31
dynamic accuracy test, 3-34
functional description of, 5-5
functional group, 5-3
linearity
dynamic accuracy test, 3-34
outputs
troubleshooting, 4-49
receiver display
running the test, 4-28
receiver group
block diagram, 5-23, 5-24
defined, 4-30
operation, 5-22
troubleshooting, 4-49
recovery
operating system, D-1
option data, B-5
reference channel switch
operation, 5-22
troubleshooting, 4-50
reference channel, *See R channel*
reference switch
illustration, 6-29
part number, 6-28
removal and replacement, 7-42
removal
A1 keypad assembly, 7-10
A2 display assembly, 7-10
A3 front panel interface board, 7-10
A4 power supply assembly, 7-14
A5 SPAM board, 7-16
A6 multiplier board, 7-16
A7 fractional-N synthesizer board, 7-16
A8 multiplier board, 7-16
A9 fractional-N synthesizer board, 7-16
A10 frequency reference board, 7-16
A11 vertical motherboard, 7-18
A12 multiplier board, 7-20
A13 fractional-N synthesizer board, 7-20
A14 system motherboard, 7-22
A15 CPU board, 7-24
A16 test set motherboard, 7-26
A17 QABC board, 7-28
A18 MASS 26.5, 7-30

A19 MASS 26.5, 7-32
A20 mixer brick, 7-34
A21 test port 1 coupler, 7-36
A22 test port 2 coupler, 7-36
A23 test port 3 coupler, 7-36
A24 test port 4 coupler, 7-36
A25 60-dB source step attenuator, 7-38
A26 60-dB source step attenuator, 7-40
A29 reference switch, 7-42
A40 floppy disk drive, 7-44
A41 hard disk drive, 7-46
DC block, 7-42
display inverter, 7-12
display lamp, 7-12
fan, 7-53
front panel assembly, 7-8
front panel subassemblies, 7-10
limiter, 7-42
midweb, 7-53
plenum, 7-18
plenum bracket, 7-18

removing
assemblies, *See specific assembly.*
options, B-4
parts, *See specific part.*

removing the cover, 1-4

repair
post-repair procedures, 7-56
procedures
caution about, 7-3
warnings about, 7-3

repairing
option data, B-5

replaceable cables
in bottom assembly, Option 140/240
illustration, 6-23
part numbers, 6-22
in bottom assembly, Option 145/245
illustration, 6-27
part numbers, 6-26
in bottom assembly, Option 146/246
illustration, 6-31
part numbers, 6-30
in top assembly, all options except 146/246
illustration, 6-13
part numbers, 6-12
in top assembly, Options 146/246
illustration, 6-17, 6-19
part numbers, 6-16, 6-18

replaceable hardware
in bottom assembly
illustration, 6-35
part numbers, 6-34
in external analyzer
illustration, 6-39
part numbers, 6-38
in hard disk drive assembly
illustration, 6-43
part numbers, 6-42
in internal analyzer
illustration, 6-37
part numbers, 6-36
in rear panel assembly
illustration, 6-41
part numbers, 6-40

replaceable parts
hardware, in bottom assembly
illustration, 6-35
part numbers, 6-34
in bottom assembly, Option 140/240
illustration, 6-21
part numbers, 6-20
in bottom assembly, Option 145/245
illustration, 6-25
part numbers, 6-24
in bottom assembly, Option 146/246
illustration, 6-29
part numbers, 6-28
in external analyzer
illustration, 6-39
part numbers, 6-38
in front panel assembly
illustration, 6-9
part numbers, 6-8
in hard disk drive assembly
illustration, 6-43
part numbers, 6-42
in internal analyzer
illustration, 6-37
part numbers, 6-36
in rear panel assembly
illustration, 6-41
part numbers, 6-40
in top assembly, all options
illustration, 6-32, 6-33
part numbers, 6-32
in top assembly, all options except 146/246
illustration, 6-11
part numbers, 6-10
in top assembly, Options 146/246
illustration, 6-14, 6-15
part numbers, 6-14
listing of, 6-6
locating
by reference designator, 6-6
by type of part, 6-7
miscellaneous analyzer
part numbers, 6-44
ordering information, 6-3

replacement
A1 keypad assembly, 7-10
A2 display assembly, 7-10
A3 front panel interface board, 7-10
A4 power supply assembly, 7-14
A5 SPAM board, 7-16
A6 multiplier board, 7-16
A7 fractional-N synthesizer board, 7-16
A8 multiplier board, 7-16
A9 fractional-N synthesizer board, 7-16
A10 frequency reference board, 7-16
A11 vertical motherboard, 7-18
A12 multiplier board, 7-20
A13 fractional-N synthesizer board, 7-20
A14 system motherboard, 7-22
A15 CPU board, 7-24
A16 test set motherboard, 7-26
A17 QABC board, 7-28
A18 MASS 26.5, 7-30
A19 MASS 26.5, 7-32
A20 mixer brick, 7-34
A21 test port 1 coupler, 7-36
A22 test port 2 coupler, 7-36
A23 test port 3 coupler, 7-36
A24 test port 4 coupler, 7-36
A25 60-dB source step attenuator, 7-38
A26 60-dB source step attenuator, 7-40
A29 reference switch, 7-42
A40 floppy disk drive, 7-44
A41 hard disk drive, 7-46
analyzer covers, 7-6
assembly
cautions about, 7-4
list of procedures, 7-5
sequence, 6-4, 7-4
warnings about, 7-4
DC block, 7-42
display inverter, 7-12
display lamp, 7-12
fan, 7-53
front panel assembly, 7-8
front panel subassemblies, 7-10
limiter, 7-42

midweb, 7-53
plenum, 7-18
plenum bracket, 7-18
replacement sequence, 4-3
return loss check
failure of, 3-13
test port cables, 3-13
RFI/EMI
supplies
part numbers, 6-45
rotary pulse generator (RPG)
illustration, 6-9
part number, 6-8
test, 4-16, 4-18
troubleshooting, 4-16
RS-232 port
rear panel connector, 5-29
troubleshooting, 4-21

S

S02, second source option, 2-5
safety
considerations, 1-3
earth ground, 1-3
symbols, 1-3
SCPI, A-9
screws
for bottom assemblies
illustration, 6-35
part numbers, 6-34
in external analyzer
illustration, 6-39
part numbers, 6-38
in hard disk drive assembly
illustration, 6-43
part numbers, 6-42
in rear panel assembly
illustration, 6-41
part numbers, 6-40
second source, Option S02, 2-5
serial bus
test, 4-32
dialog box, 4-33
performing, 4-32
serial number
changing, B-6
installing, B-6
SERIAL port
rear panel connector, 5-29
troubleshooting, 4-21
service
contacting Agilent, 2-11
EMI/RFI parts
part numbers, 6-45
memory modules
part numbers, 6-45
miscellaneous parts
required, 2-9
options, 2-10
procedures
caution about, 7-3
post-repair, 7-56
warnings about, 7-3
static safety parts
part numbers, 6-45
required, 2-9
test equipment
required, 2-7
tools
part numbers, 6-44
required, 2-9
warnings, 1-4
warranty
standard, 2-10
three-year return to Agilent, 2-10
shipment for service or repair, 2-11
signal separation
functional description of, 5-5
functional group, 5-3
signal separation group
defined, 4-30
operation, 5-16
troubleshooting, 4-45
signal separation group, active
block diagram, 5-19, 5-20
signal separation group, passive
block diagram, 5-16
single band failure, 4-37
software
options, B-4
source
calibration, 3-42
functional group, 5-3
maximum output power test, 3-29
power accuracy test, 3-28
power linearity test, 3-29
source attenuator
description of Option 1E1, 2-5
illustration, 6-25, 6-29
operation, 5-17
part number, 6-24, 6-28
removal and replacement, 7-38
troubleshooting, 4-46, 4-48
source attenuator, second source
description of Option S02, 2-5
illustration, 6-14, 6-15
part number, 6-14
removal and replacement, 7-40
source group
block diagram, 5-7
defined, 4-30
operation, 5-6
troubleshooting, 4-32
source match
cause of failure, A-12
definition of, A-12
measurements affected by, A-12
SPAM board
illustration, 6-11, 6-14, 6-15
operation
analog, 5-22
digital, 5-28
part number, 6-10, 6-14
removal and replacement, 7-16
troubleshooting, 4-49
speaker
front panel, 5-27
troubleshooting, 4-16
specifications
instrument, 3-6
stabilization, warm up time, 3-4
system, 3-6
stabilization
warm up time, 3-4
standards compliant calibration, Option R-50C-002, 2-10
static safety parts
required for servicing, 2-9
step attenuator, second source
illustration, 6-14, 6-15
part number, 6-14
removal and replacement, 7-40
step attenuator, source
illustration, 6-25, 6-29
operation, 5-17
part number, 6-24, 6-28
removal and replacement, 7-38
troubleshooting, 4-46, 4-47, 4-48
storage data
IDE, 5-29
strap handle
analyzer
illustration, 6-39
part number, 6-38
subgroup
data acquisition and processing, 5-25
front panel, 5-25
subnet mask, LAN, 4-22
substitution
cable, 3-23
calibration kits, 3-23
verification kits, 3-23
supplies
EMI/RFI
part numbers, 6-45
ESD
part numbers, 6-45
memory modules
part numbers, 6-45

support
contacting Agilent, 2-11
options, 2-10
organization, 2-10
switch, reference
illustration, 6-29
part number, 6-28
synthesized source
functional description of, 5-4
synthesized source group
operation, 5-6
system
adjustments, 3-1, 3-40, B-1, C-1
frequency at 10 MHz, 3-40
getting ready, 3-4
LO power, 3-41
receiver calibration, 3-43
source calibration, 3-42
checks, 3-1, B-1, C-1
getting ready, 3-4
specifications, 3-6
verification, 3-1, 3-7, 3-19, B-1, C-1
dialog box, 3-23
example of results, 3-26, 3-27
failure flowchart, 3-25
failure of, 3-25
getting ready, 3-4
interpreting results, 3-26
performing, 3-22
procedure, 3-23
what it verifies, 3-19
system motherboard
illustration, 6-11, 6-14, 6-15
operation, 5-27
part number, 6-10, 6-14
removal and replacement, 7-22
troubleshooting, 4-11
system, operating
recovery, D-1

T

termination, 50-ohm
illustration, 6-19, 6-29
part number, 6-18, 6-28
test
calibration coefficients, 3-33
dynamic accuracy, 3-34
frequency accuracy, 3-30
noise floor, 3-32
performance
frequency accuracy, 3-30
source maximum power output, 3-29
source power accuracy, 3-28
test port maximum power output, 3-29
test port power accuracy, 3-28
power meter accuracy, 3-35
receiver compression, 3-31
source power linearity, 3-29
test port output power linearity, 3-29
trace noise, 3-30
test equipment
required for service, 2-7
required for servicing, 2-7
test port
cable checks
connector repeatability failure, 3-18
dynamic accuracy test, 3-34
maximum output power test, 3-29
noise floor test, 3-32
output power accuracy test, 3-28
output power linearity test, 3-29
test port 1 coupler
illustration, 6-21, 6-25, 6-29
operation, 5-17
part number, 6-20, 6-24, 6-28
removal and replacement, 7-36
troubleshooting, 4-46
test port 2 coupler
illustration, 6-21, 6-25, 6-29
operation, 5-17
part number, 6-20, 6-24, 6-28
removal and replacement, 7-36
troubleshooting, 4-46
test port 3 coupler
illustration, 6-21, 6-25, 6-29
operation, 5-17
part number, 6-20, 6-24, 6-28
removal and replacement, 7-36
troubleshooting, 4-46
test port 4 coupler
illustration, 6-21, 6-25, 6-29
operation, 5-17
part number, 6-20, 6-24, 6-28
removal and replacement, 7-36
troubleshooting, 4-46
test port cable
checks, 3-10
accessories used in, 3-12
connector repeatability, 3-17
insertion loss, 3-14
insertion loss failure, 3-14
magnitude and phase stability, 3-15
magnitude and phase stability failure, 3-16
performing, 3-12
return loss, 3-13
return loss failure, 3-13
TEST SET I/O
connector
pin assignments, 5-12
rear panel, 5-11
test set motherboard
illustration, 6-21, 6-29
operation, 5-11
part number, 6-20, 6-24, 6-25, 6-28
removal and replacement, 7-26
test nodes, 4-35, 4-36
troubleshooting, 4-35, 4-36
tests
adjustments, 3-40
performance, 3-7, 3-28
serial bus, 4-32
dialog box, 4-33
performing, 4-32
source group, 4-37
tests nodes
on A10 frequency reference, 4-34
on A16 test set motherboard, 4-35, 4-36
on A6 multiplier board, 4-33
on A7 fractional-N synthesizer board, 4-34
on A8 multiplier board, 4-33
on A9 fractional-N synthesizer board, 4-34
time domain, Option 010
description of, 2-4
tools
required for servicing, 2-9
service, part numbers, 6-44
top assembly, all options
hardware
illustration, 6-32, 6-33
part numbers, 6-32
top assembly, all options except 146/246
replaceable cables
illustration, 6-13
part numbers, 6-12
replaceable parts
illustration, 6-11
part numbers, 6-10
top assembly, Options 146/246
replaceable cables
illustration, 6-17, 6-19
part numbers, 6-16, 6-18
replaceable parts
illustration, 6-14, 6-15
part numbers, 6-14
touch-up
paint
part numbers, 6-46

trace
troubleshooting
all traces, 4-31
troubleshooting all, 4-28
trace A
troubleshooting, 4-28, 4-31
trace B
troubleshooting, 4-28, 4-31
trace C
troubleshooting, 4-28, 4-31
trace D
troubleshooting, 4-28, 4-31
trace noise
test, 3-30
trace R
troubleshooting, 4-28, 4-31
trace, all
troubleshooting, 4-31
traceability
measurement, 3-21
path, 3-21
traces A, B, and R1
troubleshooting, 4-31
traces C, D, and R 3
troubleshooting, 4-31
TRIG IN connector
rear panel, 5-11
TRIG OUT connector
rear panel, 5-11
troubleshooting
1284-C port, 4-21
A1 front panel keypad, 4-16
A2 display assembly, 4-12, 4-16
A3 front panel interface board, 4-12, 4-16
A4 power supply assembly, 4-7
A5 SPAM board, 4-49
A6 multiplier board
all bands, 4-41
A7 fractional-N synthesizer board
band 4, 4-39
bands 0-3, 4-39
bands 5-17, 4-40
A8 multiplier board
all bands, 4-42
A9 fractional-N synthesizer board
band 4, 4-41
bands 0-3, 4-41
bands 5-17, 4-42
A10 frequency reference board, 4-38
A12 multiplier board
all bands, 4-44
A13 fractional-N synthesizer board
band 4, 4-43
bands 0-3, 4-43
bands 5-17, 4-44
A14 motherboard, 4-11
A15 CPU board, 4-12, 4-20
A16 test set motherboard, 4-35, 4-36
A18 MASSQuad, 4-46, 4-48
A19 MASSQuad, 4-46, 4-48
A20 mixer brick, 4-49
A21 test port 1 coupler, 4-46
A22 test port 2 coupler, 4-46
A23 test port 3 coupler, 4-46
A24 test port 4 coupler, 4-46
A25 source step attenuator, 4-47, 4-48
A26 source step attenuator, 4-48
A29 reference channel switch, 4-50
all bands, 4-42, 4-44
all traces, 4-31
band 4, 4-39, 4-41, 4-43
bands 0-3, 4-39, 4-41, 4-43
bands 5-17, 4-40, 4-42, 4-44
channel A, 4-28, 4-45
channel B, 4-28, 4-45
channel C, 4-28, 4-45
channel D, 4-28, 4-45
channel R, 4-28
check the basics, 4-4
error term failure
suspect devices, A-3
fans, 4-11
front panel, 4-16
front panel knob, 4-16
front-panel USB, 4-16
GPIB port, 4-21
LAN, 4-22
LCD display, 4-12
measurement system, 4-26
receiver group, 4-49
running the receiver display, 4-28
signal separation group, 4-45
source group, 4-32, 4-37
traces A, B, C, D, R, 4-28
where to begin, 4-30
order of removal of boards, 4-9
PARALLEL port, 4-21
ping command, 4-22
power output of channel A, 4-45
power output of channel B, 4-45
power output of channel C, 4-45
power output of channel D, 4-45
power up, 4-6
power supply check, 4-7
probe power, 4-16
rear panel, 4-20
rear-panel USB, 4-20
receiver outputs, 4-49
RPG, 4-16
RS-232 port, 4-21
SERIAL port, 4-21
source group
single vs. broadband, 4-37
speaker, 4-16
trace A, 4-28
trace B, 4-28
trace C, 4-28
trace D, 4-28
trace R, 4-28
typical power output
Port 1, 4-45
Port 2, 4-45
Port 3, 4-45
Port 4, 4-45
using controllers to system troubleshoot, 4-22
using error terms, A-3
using the extender board, 4-8
VGA port, 4-21
where to begin, 4-4

U

uncertainty
measurement, 3-20
upgrade
20 GHz frequency range, Option F20, 2-5
configurable test set, Option 014, 2-4
extended power range, Option 1E1, 2-5
firmware
downloading from the internet, C-2
frequency offset mode, Option 080, 2-4
how to order, 2-3, 2-6
second source, Option S02, 2-5
source attenuator, Option 1E1, 2-5
time domain, Option 010, 2-4
upgrade kits
part numbers, 6-45
upgrades
analyzer, 2-6
USB
accessories
CD-RW drive, 2-6
hub, 2-6
part numbers, 6-45
front panel
troubleshooting, 4-16

port
front panel connector, 5-27
rear panel connector, 5-29
rear panel
troubleshooting, 4-20
USB hub
operation, 5-29
utility
option enable
accessing, B-3
dialog box, B-3

V

VCO (voltage-controlled oscillator)
defined, 5-6
ventilation requirements, 1-3
verification
ANSI/NCSL Z540-1-1994, 3-8
kits, 2-8, 3-7
substitution, 3-23
non-ANSI/NCSL Z540-1-1994, 3-9
of operating environment, 3-4
of operating specifications, 3-4
system, 3-1, 3-7, 3-19, B-1, C-1
dialog box, 3-23
example of results, 3-26, 3-27
failure flowchart, 3-25
failure of, 3-25
getting ready, 3-4
interpreting results, 3-26
performing, 3-22
procedure, 3-23
what it verifies, 3-19
vertical motherboard
illustration, 6-14, 6-15
part number, 6-14
removal and replacement, 7-18
VGA monitor, 4-12
VGA port
rear panel connector, 5-29
troubleshooting, 4-21

W

warm up
analyzer, 3-4
warning, 1-3
warnings
for servicing, 1-4
warranty
service
standard, 2-10
three-year return to Agilent, 2-10
Windows, 2-7